Maintenance and Service Guide

SUMMARY

This guide provides information about spare parts, removal and replacement of parts, security, backing up, and more.

Legal information

© Copyright 2022 HP Development Company, L.P.

Bluetooth is a trademark owned by its proprietor and used by HP Inc. under license. Intel, Core, Iris, Optane, and vPro are trademarks of Intel Corporation or its subsidiaries in the U.S. and/or other countries. SDHC, SDXC, and microSD are trademarks or registered trademarks of SD-3C LLC. Microsoft and Windows are either registered trademarks or trademarks of Microsoft Corporation in the United States and/or other countries. NVIDIA, GeForce, and Optimus are trademarks and/or registered trademarks of NVIDIA Corporation in the U.S. and other countries. USB Type-C and USB-C are registered trademarks of USB Implementers Forum. DisplayPort™ and the DisplayPort™ logo are trademarks owned by the Video Electronics Standards Association (VESA®) in the United States and other countries. Miracast and Wi-Fi are registered trademarks of Wi-Fi Alliance.

The information contained herein is subject to change without notice. The only warranties for HP products and services are set forth in the express warranty statements accompanying such products and services. Nothing herein should be construed as constituting an additional warranty. HP shall not be liable for technical or editorial errors or omissions contained herein.

First Edition: May 2022

Document Part Number: N02168-001

Product notice

This guide describes features that are common to most models. Some features may not be available on your computer.

Not all features are available in all editions or versions of Windows. Systems may require upgraded and/or separately purchased hardware, drivers, software or BIOS update to take full advantage of Windows functionality. Windows 10 is automatically updated, which is always enabled. ISP fees may apply and additional requirements may apply over time for updates. Go to http://www.microsoft.com for details.

To access the latest user guides, go to http://www.hp.com/support, and follow the instructions to find your product. Then select **Manuals**.

Software terms

By installing, copying, downloading, or otherwise using any software product preinstalled on this computer, you agree to be bound by the terms of the HP End User License Agreement (EULA). If you do not accept these license terms, your sole remedy is to return the entire unused product (hardware and software) within 14 days for a full refund subject to the refund policy of your seller.

For any further information or to request a full refund of the price of the computer, please contact your seller.

Safety warning notice

Reduce the possibility of heat-related injuries or of overheating the computer by following the practices described.

⚠ **WARNING!** To reduce the possibility of heat-related injuries or of overheating the computer, do not place the computer directly on your lap or obstruct the computer air vents. Use the computer only on a hard, flat surface. Do not allow another hard surface, such as an adjoining optional printer, or a soft surface, such as pillows or rugs or clothing, to block airflow. Also, do not allow the AC adapter to come into contact with the skin or a soft surface, such as pillows or rugs or clothing, during operation. The computer and the AC adapter comply with the user-accessible surface temperature limits defined by applicable safety standards.

Table of contents

1 Product description 1

2 Getting to know your computer 5

Right side 5

Left side 6

Display 7

Low blue light mode (select products only) 7

Wake-on-voice (select products only) 7

Keyboard area 8

Touchpad settings and components 9

Touchpad settings 9

Adjusting touchpad settings 9

Turning on the touchpad 9

Touchpad components 9

Lights 10

Button and fingerprint reader 11

Special keys 12

Front 13

Rear 13

Bottom 14

Labels 14

3 Illustrated parts catalog 17

Computer major components 17

Display assembly subcomponents 20

Miscellaneous parts 22

4 Removal and replacement procedures preliminary requirements 25

Tools required 25

Service considerations 25

Plastic parts 25

Cables and connectors 25

Drive handling 25

Electrostatic discharge information 26

Generating static electricity 26

Preventing electrostatic damage to equipment 27

Personal grounding methods and equipment 27

Grounding the work area 28

Recommended materials and equipment 28

Cleaning your computer 29

Enabling HP Easy Clean (select products only) 29
Removing dirt and debris from your computer 29
Cleaning your computer with a disinfectant 30
Caring for wood veneer (select products only) 31
Packaging and transporting guidelines 31
Accessing support information 31
5 Removal and replacement procedures for authorized service provider parts 34
Component replacement procedures 34
Preparation for disassembly 34
Bottom cover 34
Battery 35
Touchpad 37
WLAN module 40
Solid-state drive 41
Speakers 43
USB/audio board 44
Fingerprint reader 45
Fan 46
Heat sink 47
System board 49
Display assembly 52
Top cover with keyboard 60
6 Using Setup Utility (BIOS) 61
Starting Setup Utility (BIOS) 61
Updating Setup Utility (BIOS) 61
Determining the BIOS version 61
Preparing for a BIOS update 62
Downloading a BIOS update 62
Installing a BIOS update 62
7 Backing up, restoring, and recovering 64
Backing up information and creating recovery media 64
Using Windows tools for backing up 64
Using the HP Cloud Recovery Download Tool to create recovery media (select products only) 64
Restoring and recovering your system 64
Creating a system restore 65
Restoring and recovery methods 65
Recovering using HP Recovery media 65
Changing the computer boot order 66
Using HP Sure Recover (select products only) 66
8 Using HP PC Hardware Diagnostics 67
Using HP PC Hardware Diagnostics Windows (select products only) 67
Using an HP PC Hardware Diagnostics Windows hardware failure ID code 67
Accessing HP PC Hardware Diagnostics Windows 67
Accessing HP PC Hardware Diagnostics Windows from HP Support Assistant 67

Accessing HP PC Hardware Diagnostics Windows from the Start menu (select products only) 68
Downloading HP PC Hardware Diagnostics Windows 68
Downloading the latest HP PC Hardware Diagnostics Windows version from HP 68
Downloading the HP PC Hardware Diagnostics Windows from the Microsoft Store 68
Downloading HP Hardware Diagnostics Windows by product name or number (select products only) 68
Installing HP PC Hardware Diagnostics Windows 69
Using HP PC Hardware Diagnostics UEFI 69
Using an HP PC Hardware Diagnostics UEFI hardware failure ID code 69
Starting HP PC Hardware Diagnostics UEFI 69
Downloading HP PC Hardware Diagnostics UEFI to a USB flash drive 70
Downloading the latest HP PC Hardware Diagnostics UEFI version 70
Downloading HP PC Hardware Diagnostics UEFI by product name or number (select products only) 70
Using Remote HP PC Hardware Diagnostics UEFI settings (select products only) 71
Downloading Remote HP PC Hardware Diagnostics UEFI 71
Downloading the latest Remote HP PC Hardware Diagnostics UEFI version 71
Downloading Remote HP PC Hardware Diagnostics UEFI by product name or number 71
Customizing Remote HP PC Hardware Diagnostics UEFI settings 71
9 Specifications 73
Computer specifications 73
35.6 cm (14.0 in) display specifications 73
Solid-state drive specifications 74
10 Power cord set requirements 76
Requirements for all countries 76
Requirements for specific countries and regions 76
11 Recycling 78
Index 79

1 Product description

This table provides detailed product information.

Table 1-1 Product components and their descriptions

Category	Description
Product Name	**HP Pavilion Plus 14 inch Laptop PC**
	Model numbers: 14-eh0xxx
Processors	**12th generation Intel® processors**
	Intel Core® i7-12700H (2.3 GHz [turbo up to 4.7 GHz], 14 cores, 24 MB L3 cache, 45 W)
	Intel Core i5-12500H (2.5 GHz [turbo up to 4.5 GHz], 12 cores, 18 MB L3 cache, 45 W)
	Intel Core i5-1240P (1.7 GHz [turbo up to 4.4 GHz], 12 cores, 12 MB L3 cache, 28 W)
	Intel Core i7-1255U (1.7 GHz [turbo up to 4.7 GHz], 10 cores, 12 MB L3 cache, 15 W)
	Intel Core i5-1235U (1.3 GHz [turbo up to 4.4 GHz], 10 cores, 12 MB L3 cache, 15 W)
Graphics	**Internal graphics**
	Intel Iris® Xe Graphics
	Discrete graphics
	NVIDIA® GeForce® MX550 graphics
	NVIDIA GeForce RTX 2050 graphics
	Supports HD Decode, DX12, and HDMI
	Supports Optimus®
	Supports GPS (GPU Performance Scaling)
	Dynamic boost
Display	**14.0 in (35.6 cm)**
	2.8K (2880 × 1800), Organic Light-Emitting Diode (OLED), In-Plane Switching (IPS), 100% DCI-P3, BrightView, ultra wide viewing angle (UWVA), embedded DisplayPort (eDP) 1.4 + panel self-refresh (PSR), 400 nits, 90 Hz
	2.2K (2240 × 1400), LCD, IPS, low blue light, antiglare, 100% sRGB, eDP 1.4 + PSR2, 300 nits
Memory	Integrated, not customer accessible or upgradeable supporting up to 16 GB of RAM
	DDR4-3200 dual-channel support
	Supports the following configurations:
	• 16 GB
	• 8 GB

Table 1-1 Product components and their descriptions (continued)

Category	Description
Primary storage	**PCIe, Non-Volatile Memory express (NVMe), M.2 2280 solid-state drives**
	1 TB
	512 GB
	512 GB, PCIe-4×4, triple layer cell (TLC)
	256 GB
Audio and video	B&O Play
	Dual speakers
	Support for HP Audio Boost
	Supports Alexa
	Supports XiaoWei
	Supports Cortana (far field)
	Supports lid close Wake On Voice (WOV)
	Two digital microphones
	HP True Vision 5 MP Camera: indicator LED, USB 2.0, 5 MP BSI sensor, f2.0, 76° narrow field-of-view (NFOV)
	5 MP by 30 frames per second
	Dual-array digital microphone with appropriate software: beam forming, echo cancellation, noise suppression
Wireless	Compatible with Miracast® devices
	Supports Modern Standby (Connected)
	Intel Bluetooth Audio Offload
	Dynamic antenna gain
	Integrated wireless module
	Intel AX211 Wi-Fi® 6e Bluetooth® 5.2 WLAN
	Realtek 802.11b/g/n/a/ac (2x2) MU-MIMO supported and Bluetooth 5
	Realtek 8852BE Wi-Fi 6 Bluetooth 5.2 WLAN
Media card reader	Supports microSD™, SDHC™, SDXC™
	Push-push insertion/removal
Ports	Hot plug/unplug and autodetect for correct output to wide-aspect vs. standard aspect video
	Audio-out (headphone)/audio-in (microphone) combo jack
	(2) USB 3.2 Gen 2 Type-C (support data transfer, power delivery, HP Sleep & Charge; DisplayPort 1.4 out up to 4K @ 60 Hz and HDMI 1.4 out through adapter; HDMI 2.0 out up to 4K @ 60 Hz with HDCP 2.2 through adapter)
	HDMI v2.1 + HDCP 2.2 supporting 4K/2K @ 60 Hz
	USB 3.2 Gen 1 Type-A (2)
	AC Smart pin adapter plug

Table 1-1 Product components and their descriptions (continued)

Category	Description
Keyboard/pointing devices	**Keyboard**
	Full size, island style
	Backlit, full size, island style
	Touchpad
	Clickpad with image sensor
	Multitouch gestures enabled
	Precision touchpad support
	Support for Modern Trackpad Gestures
	Taps enabled as default
Power requirements	**Battery**
	3 cell, 51 Whr, polymer, HP Long Life
	HP Fast Charge Technology
	Smart AC adapters (USB Type-C)
	90 W
	65 W
	Power cord
	C5, conventional, 1 m
	C5, premium, 1 m (3.3 ft)
	C5, premium, 1m (3.3 ft) with plug adapter
Security	Supports Trusted Platform Module (TPM) 2.0, firmware based
	Integrated fingerprint reader (FIDO 2.0 and SecureBio)

Table 1-1 Product components and their descriptions (continued)

Category	Description
Operating system	Windows® 11 Home 64
	Windows 11 Home 64 Advanced
	Windows 11 Home 64 Advanced Single Language
	Windows 11 Home 64 Chinese Market CPPP
	Windows 11 Home 64 High-end Chinese Market CPPP
	Windows 11 Home 64 Plus
	Windows 11 Home 64 Plus Single Language
	Windows 11 Home 64 Plus Single Language Africa Market PPP
	Windows 11 Home 64 Plus Single Language APAC EM PPP
	Windows 11 Home 64 Plus Single Language India Market PPP
	Windows 11 Home 64 Plus Single Language Indonesia Market PPP
	Windows 11 Home 64 Single Language
	Windows 11 Home 64 Single Language Africa Market PPP
	Windows 11 Home 64 Single Language APAC EM PPP
	Windows 11 Home 64 Single Language India Market PPP
	Windows 11 Home 64 Single Language Indonesia Market PPP
	Windows 11 Home S 64
	Windows 11 Home S 64 Advanced
	Windows 11 Home S 64 Plus
	Windows 11 Pro 64
	Windows 11 Pro 64 High End Chinese Market
	FreeDOS 3.0
Serviceability	**End user replaceable parts**
	AC adapter

2 Getting to know your computer

Your computer features top-rated components. This chapter provides details about your components, where they are located, and how they work.

Right side

Identify the components on the right side of the computer.

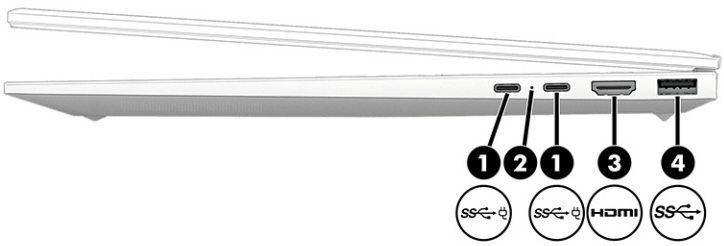

Table 2-1 **Right-side components and their descriptions**

Component			Description
(1)		USB Type-C® power connector and SuperSpeed 10 Gbps ports (2) with DisplayPort output	Connect an AC adapter that has a USB Type-C connector, supplying power to the computer and, if needed, charging the computer battery. – and – Connect a USB device, provides high-speed data transfer, and (for select products) charge small devices (such as a smartphone) when the computer is on or in Sleep mode. NOTE: Use a standard USB Type-C charging cable or cable adapter (purchased separately) when charging a small external device. – and – Connect a display device that has a USB Type-C connector, providing DisplayPort™ output.
(2)		AC adapter and battery light	• White: The AC adapter is connected and the battery is fully charged. • Blinking amber: The AC adapter is disconnected and the battery has reached a low battery level. • Amber: The AC adapter is connected and the battery is charging. • Off: The battery is not charging.
(3)	HDMI	HDMI port	Connects an optional video or audio device, such as a high-definition television, any compatible digital or audio component, or a high-speed High-Definition Multimedia Interface (HDMI) device.

Table 2-1 **Right-side components and their descriptions (continued)**

Component		Description
(4)	USB SuperSpeed 5 Gbps port	Connects a USB device, provides high-speed data transfer, and (for select products) charges small devices (such as a smartphone) when the computer is on or in Sleep mode. NOTE: Use a standard USB Type-A charging cable or cable adapter (purchased separately) when charging a small external device.

Left side

Identify the components on the left side of the computer.

Table 2-2 **Left-side components and their descriptions**

Component		Description
(1)	Audio-out (headphone)/Audio-in (microphone) combo jack	Connects optional powered stereo speakers, headphones, earbuds, a headset, or a television audio cable. Also connects an optional headset microphone. This jack does not support optional standalone microphones. WARNING! To reduce the risk of personal injury, adjust the volume before putting on headphones, earbuds, or a headset. For additional safety information, see the *Regulatory, Safety, and Environmental Notices*. To access this guide: ■ Select the **Search** icon in the taskbar, type `HP Documentation` in the search box, and then select **HP Documentation**. NOTE: When a device is connected to the jack, the computer speakers are disabled.
(2)	USB SuperSpeed 5 Gbps port	Connects a USB device, provides high-speed data transfer, and (for select products) charges small devices (such as a smartphone) when the computer is on or in Sleep mode. NOTE: Use a standard USB Type-A charging cable or cable adapter (purchased separately) when charging a small external device.

Table 2-2 **Left-side components and their descriptions (continued)**

Component		Description
(3)	SD microSD™ memory card reader (select products only)	Reads optional memory cards that enable you to store, manage, share, or access information. To insert a card: 1. Hold the card label-side up, with connectors facing the computer. 2. Insert the card into the memory card reader, and then press in on the card until it is firmly seated. To remove a card: ■ Press in on the card, and then remove it from the memory card reader.

Display

The computer display can include essential components such as speakers, antennas, cameras, and microphones.

Low blue light mode (select products only)

Your computer display is shipped from the factory in low blue light mode for improved eye comfort and safety. Also, blue light mode automatically adjusts blue light emissions when you are using the computer at night or for reading.

WARNING! To reduce the risk of serious injury, read the *Safety & Comfort Guide*. It describes proper workstation setup and proper posture, health, and work habits for computer users. The *Safety & Comfort Guide* also provides important electrical and mechanical safety information. The *Safety & Comfort Guide* is available on the web at http://www.hp.com/ergo.

Wake-on-voice (select products only)

Use the wake-on-voice feature to bring the computer out of the Sleep state quickly.

To access the wake-on-voice settings, follow these steps:

1. Select the **Search** icon in the taskbar, type `XiaoWei` in the search box, and then select **XiaoWei**.
2. When the tool opens, scan the QR code with your mobile device, which takes you to the settings page, where you can select your wake-on-voice features.
3. Follow the on-screen instructions.

NOTE: Allow the XiaoWei app to continue running on the computer.

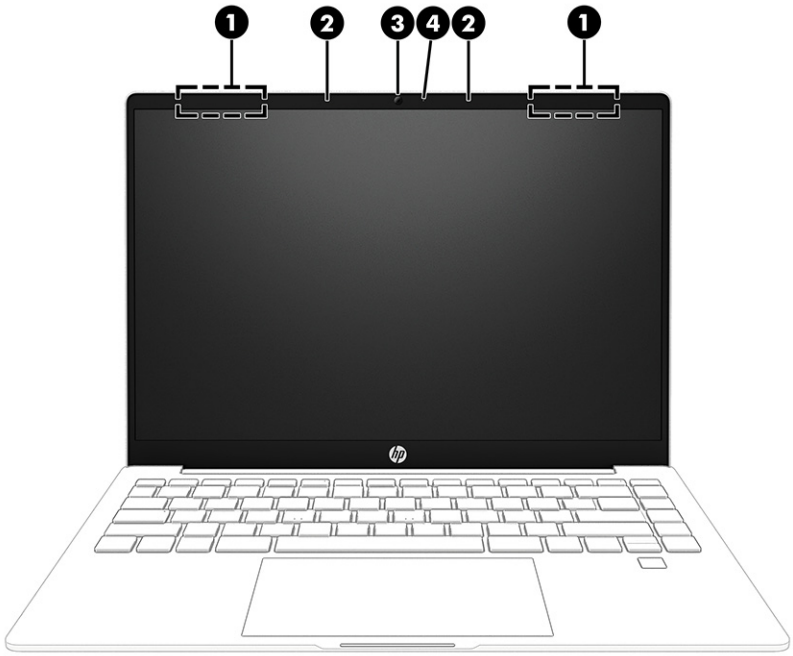

Table 2-3 **Display components and their descriptions**

Component		Description
(1)	WLAN antennas*	Send and receive wireless signals to communicate with wireless local area networks (WLANs).
(2)	Internal microphones (2)	Record sound.
(3)	Camera	Allows you to video chat, record video, and record still images. Some cameras also allow a facial recognition logon to Windows, instead of a password logon. NOTE: Camera functions vary depending on the camera hardware and software installed on your product.
(4)	Camera light	On: The camera is in use.

*The antennas are not visible from the outside of the computer. For optimal transmission, keep the areas immediately around the antennas free from obstructions.

For wireless regulatory notices, see the section of the *Regulatory, Safety, and Environmental Notices* that applies to your country or region.

To access this guide:

- Select the **Search** icon in the taskbar, type `HP Documentation` in the search box, and then select **HP Documentation**.

Keyboard area

Keyboards can vary by language.

NOTE: The keyboard area, including the function keys and (select products only) power key, is disabled in stand, tent, and tablet modes. To enable the keyboard, including the power key, change to the clamshell mode.

Touchpad settings and components

Learn the touchpad settings and components.

Touchpad settings

Learn how to adjust touchpad settings.

Adjusting touchpad settings

Use these steps to adjust touchpad settings and gestures.

1. Select the **Search** icon in the taskbar, type `touchpad settings` in the search box, and then press enter.
2. Choose a setting.

Turning on the touchpad

Follow these steps to turn on the touchpad.

1. Select the **Search** icon in the taskbar, type `touchpad settings` in the search box, and then press enter.
2. Using an external mouse, click the **touchpad** button.

   If you are not using an external mouse, press the Tab key repeatedly until the pointer rests on the **touchpad** button. Then press the spacebar to select the button.

Touchpad components

Identify the touchpad components.

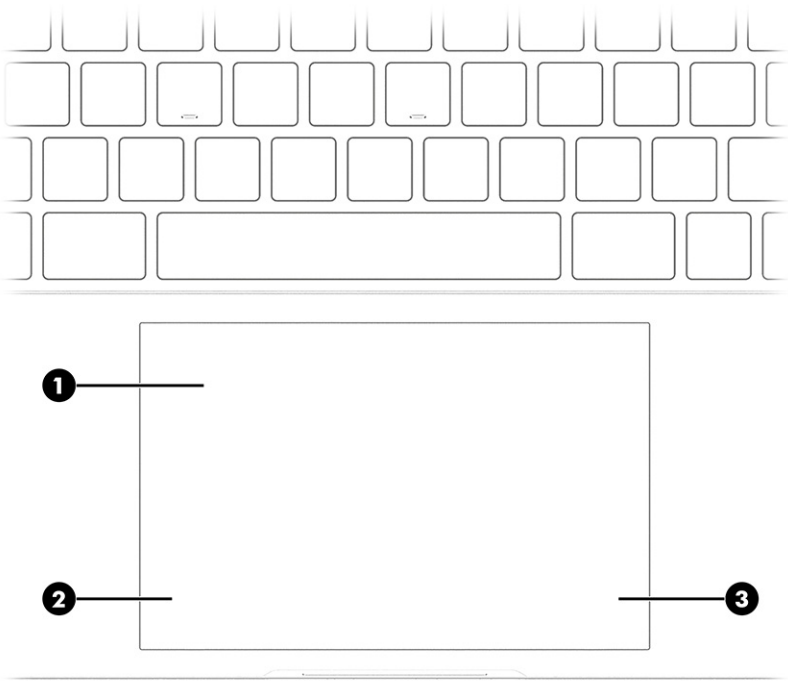

Table 2-4 Touchpad components and their descriptions

Component		Description
(1)	Touchpad zone	Reads your finger gestures to move the pointer or activate items on the screen.
(2)	Left control zone	Textured area that allows you to perform additional gestures.
(3)	Right control zone	Textured area that allows you to perform additional gestures.

Lights

Identify the lights on the computer.

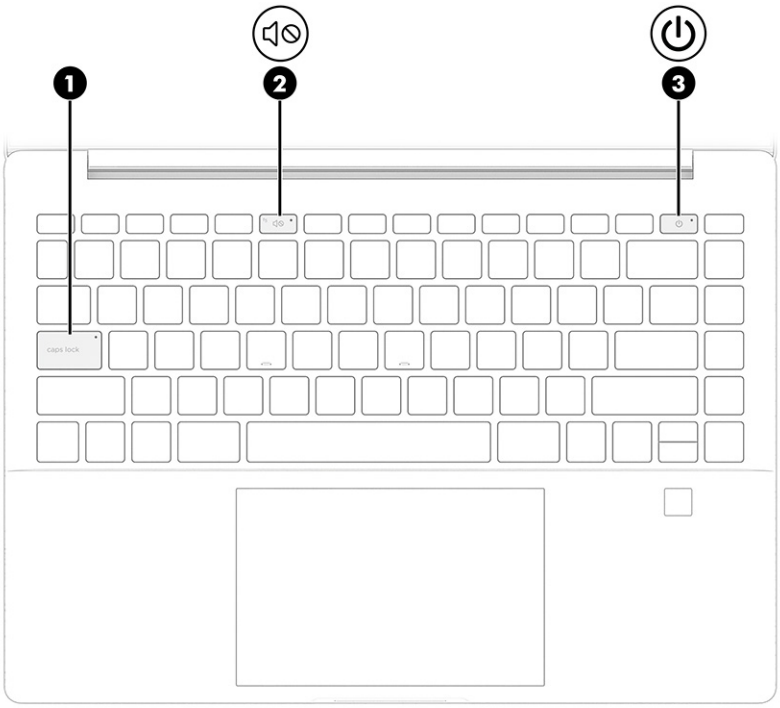

Table 2-5 Lights and their descriptions

Component			Description
(1)		Caps lock light	On: Caps lock is on, which switches the key input to all capital letters.
(2)		Mute light	• On: Computer sound is off. • Off: Computer sound is on.
(3)		Power light	• On: The computer is on. • Blinking (select products only): The computer is in the Sleep state, a power-saving state. The computer shuts off power to the display and other unnecessary components. • Off: Depending on your computer model, the computer is off, in Hibernation, or in Sleep. Hibernation is the power-saving state that uses the least amount of power.

Button and fingerprint reader

Identify the computer button and fingerprint reader.

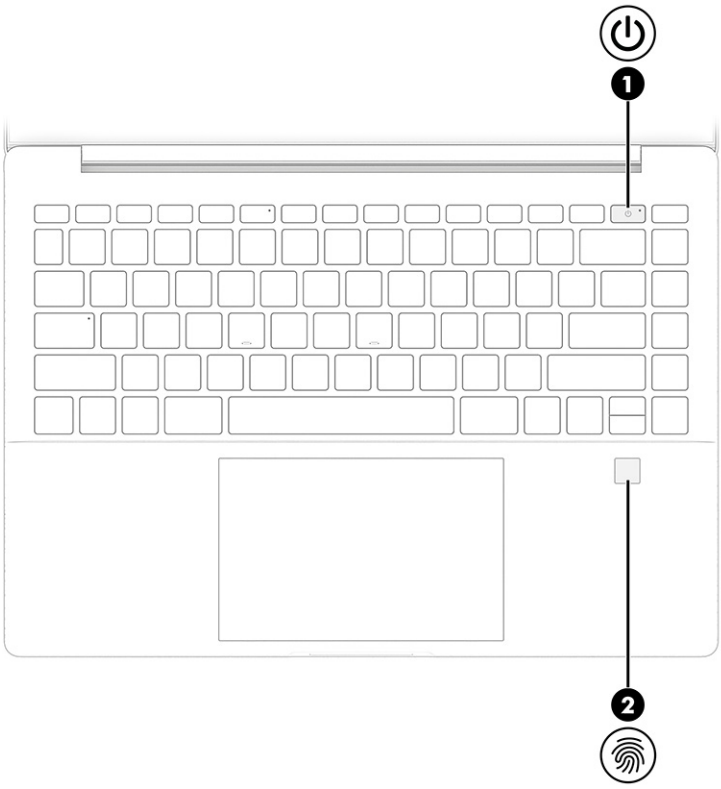

Fingerprint readers, which enable a fingerprint logon, can be located on the touchpad, on a side panel of the computer, or on the top cover below the keyboard.

IMPORTANT: To verify that your computer supports fingerprint reader sign-in, select the **Search** icon in the taskbar, type `Sign-in options` in the search box and press enter. If **Fingerprint recognition** is not listed as an option, then your computer does not include a fingerprint reader.

Table 2-6 **Button and fingerprint reader and their descriptions**

Component			Description
(1)		Power button	• When the computer is off, press the button briefly to turn on the computer. • When the computer is on, press the button briefly to initiate Sleep. • When the computer is in the Sleep state, press the button briefly to exit Sleep (select products only). • When the computer is in Hibernation, press the button briefly to exit Hibernation. IMPORTANT: Pressing and holding down the power button results in the loss of unsaved information. If the computer has stopped responding and shutdown procedures are ineffective, press and hold the power button down for at least 10 seconds to turn off the computer. To learn more about your power and sleep settings: ▪ Right-click the **Power** icon, and then select **Power and sleep settings**.
(2)		Fingerprint reader (select products only)	Allows a fingerprint logon to Windows, instead of a password logon. ▪ Swipe down across the fingerprint reader. IMPORTANT: To prevent fingerprint logon issues, make sure when you register your fingerprint that all sides of your finger are registered by the fingerprint reader.

Special keys

Identify the special keys.

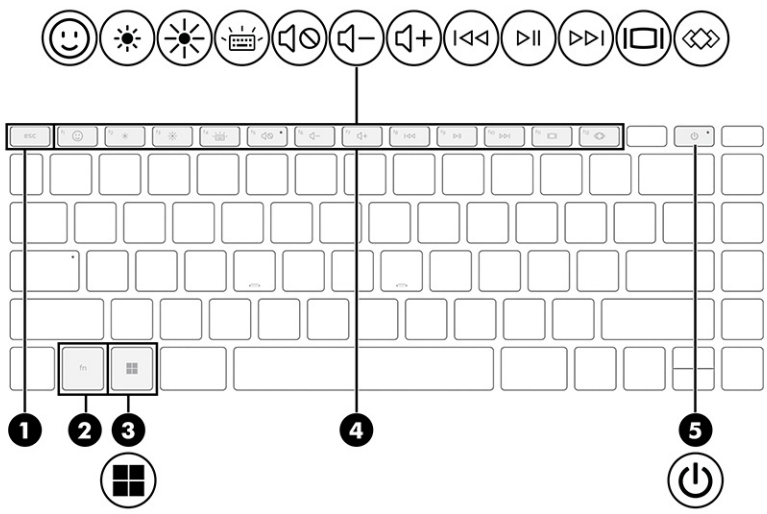

Table 2-7 **Special keys and their descriptions**

Component			Description
(1)		esc key	Displays system information when pressed in combination with the fn key.
(2)		fn key	Executes specific functions when pressed in combination with another key.
(3)		Windows key	Opens the Start menu. NOTE: Pressing the Windows key again will close the Start menu.
(4)		Action keys	Execute frequently used system functions as defined by the icon symbols on f1 through f12 function keys.
(5)		Power button	• When the computer is off, press the button briefly to turn on the computer. • When the computer is on, press the button briefly to initiate Sleep. • When the computer is in the Sleep state, press the button briefly to exit Sleep (select products only). • When the computer is in Hibernation, press the button briefly to exit Hibernation. IMPORTANT: Pressing and holding down the power button results in the loss of unsaved information. If the computer has stopped responding and shutdown procedures are ineffective, press and hold the power button down for at least 10 seconds to turn off the computer. To learn more about your power and sleep settings: ▪ Right-click the **Power** icon , and then select **Power and sleep settings**.

Front

Use the illustration and table to identify the front component.

Table 2-8 **Front component and its description**

Component	Description
Internal microphones (2)	Record sound.

Rear

Use the illustration and table to identify the rear component.

Table 2-9 Rear component and its description

Component	Description
Vent	Enables airflow to cool internal components. NOTE: The computer fan starts up automatically to cool internal components and prevent overheating. It is normal for the internal fan to cycle on and off during routine operation.

Bottom

Identify the bottom components.

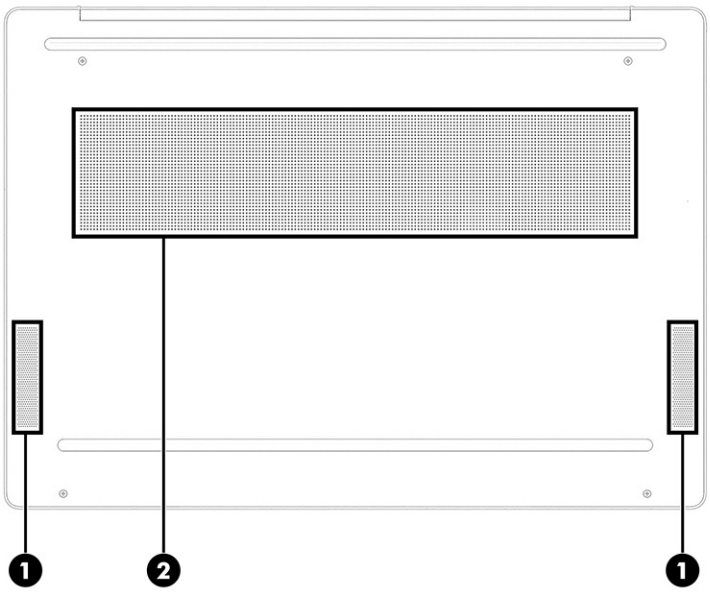

Table 2-10 Bottom components and their descriptions

Component		Description
(1)	Speakers (2)	Produce sound.
(2)	Vent	Enables airflow to cool internal components. NOTE: The computer fan starts up automatically to cool internal components and prevent overheating. It is normal for the internal fan to cycle on and off during routine operation.

Labels

The labels affixed to the computer provide information that you might need when you troubleshoot system problems or travel internationally with the computer. Labels can be in paper form or imprinted on the product.

IMPORTANT: Check the following locations for the labels described in this section: the bottom of the computer, inside the battery bay, under the service door, on the back of the display, or on the bottom of a tablet kickstand.

- Service label—Provides important information to identify your computer. When contacting support, you might be asked for the serial number, the product number, or the model number. Locate this information before you contact support.

  Your service label will resemble one of the following examples. Refer to the illustration that most closely matches the service label on your computer.

Table 2-11 Service label components

Component	
(1)	Serial number
(2)	Product ID
(3)	HP product name and model number

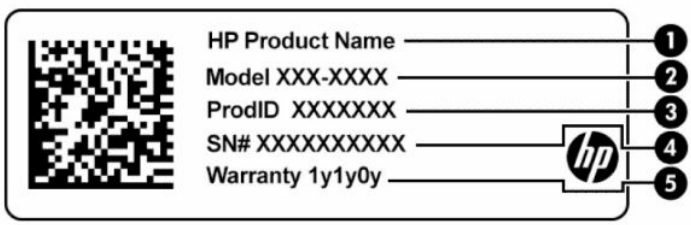

Table 2-12 Service label components

Component	
(1)	HP product name
(2)	Model number
(3)	Product ID
(4)	Serial number
(5)	Warranty period

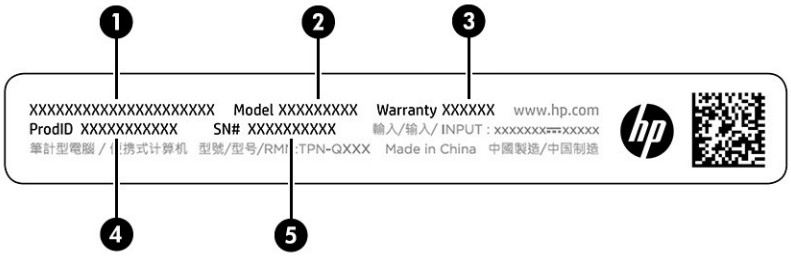

Table 2-13 Service label components

Component	
(1)	HP product name
(2)	Model number
(3)	Warranty period
(4)	Product ID
(5)	Serial number

- Regulatory labels—Provide regulatory information about the computer.
- Wireless certification labels—Provide information about optional wireless devices and the approval markings for the countries or regions in which the devices have been approved for use.

3 Illustrated parts catalog

Use this chapter to determine the spare parts that are available for the computer.

Computer major components

To identify the computer major components, use this illustration and table.

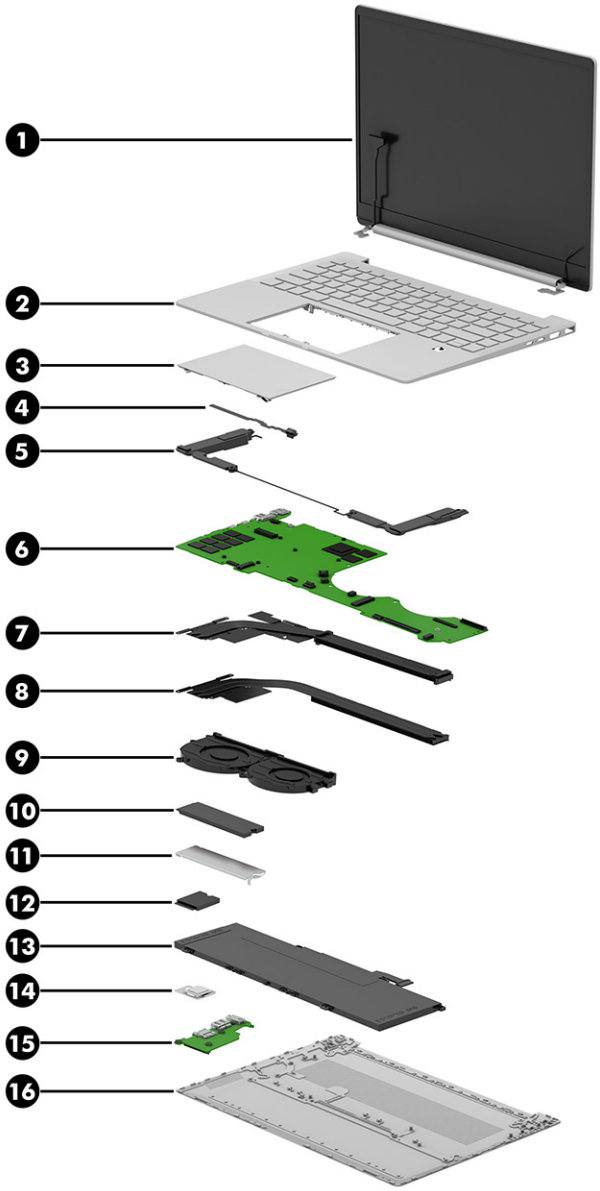

Table 3-1 Computer major component descriptions and part numbers

Item	Component	Spare part number
(1)	**Display assembly** **NOTE:** Display assemblies are offered as spare parts only at a subcomponent level. For more information, see Display assembly subcomponents on page 20.	not available as a spare part
(2)	**Top cover with keyboard** For a detailed list of country codes, see Top cover with keyboard on page 60.	
	For use in models without a fingerprint reader	
	• Mineral silver	N10398-xx1
	For use in models with a fingerprint reader	
	• Natural silver	N10393-xx1
	• Natural silver, Wake On Voice (WOV) models	N10394-xx1
	• Warm gold	N10395-xx1
	• Warm gold, WOV models	N10396-xx1
	• Space blue	N10397-xx1
	• Tranquil pink	N10399-xx1
	• Tranquil pink, WOV models	N10400-xx1
(3)	**Touchpad** (does not include bracket) **NOTE:** The touchpad cable is available using spare part number N10436-001.	
	Natural silver	N13473-001
	Warm gold	N13474-001
	Space blue	N13475-001
	Mineral silver	N13476-001
	Tranquil pink	N13477-001
(4)	**WOV light bar** **NOTE:** The WOV light bar cable is available as spare part number N10438-001.	N10418-001
(5)	**Speakers** (left and right)	N10447-001
(6)	**System board** (includes processor; for use in models with discrete graphics memory) **NOTE:** The system board repair kit is available as spare part number N20358-888. All system boards use the following part numbers: xxxxxx-001: Non-Windows operating system xxxxxx-601: Windows 10 operating system	
	Models with discrete graphics memory	
	• Intel Core i7-1255U processor and 16 GB of system memory (OLED models)	N10390-xx1
	• Intel Core i5-1235U processor and 16 GB of system memory	N10387-xx1
	• Intel Core i5-1235U processor and 16 GB of system memory (OLED models)	N10389-xx1
	Models with UMA graphics memory	

Table 3-1 Computer major component descriptions and part numbers (continued)

Item	Component	Spare part number
	• Intel Core i7-12700H processor and 16 GB of system memory (OLED models)	N10386-xx1
	• Intel Core i5-12500H processor and 16 GB of system memory (OLED models)	N10385-xx1
	• Intel Core i5-12500H processor and 16 GB of system memory	N10384-xx1
	• Intel Core i5-1240P processor and 16 GB of system memory	N10383-xx1
	• Intel Core i5-1240P processor and 8 GB of system memory	N10382-xx1
(7)	**Heat sink** (for use in models with discrete graphics) NOTE: Thermal pads are available using spare part number N10446-001.	N10442-001
(8)	**Heat sink** for use in models with UMA graphics NOTE: Thermal pads are available using spare part number N10446-001.	N10443-001
(8)	**Heat sink** for use in models with UMA graphics and a 45 W processor (i7-12700H or i5-12500H) NOTE: Thermal pads are available using spare part number N10446-001.	N10444-001
(9)	**Fan**	M16664-001
	Graphics processing unit	N10439-001
	Main processor	N10440-001
(10)	**Solid-state drive** (PCIe) NOTE: Solid-state drive thermal pad is available as spare part number M46333-001.	
	1 TB	L85370-005
	512 GB	L85364-005
	512 GB, TLC	M17436-005
	256 GB	L85354-005
(11)	**Solid-state drive cover**	not available as a spare part
(12)	**WLAN module**	
	Realtek 8852BE Wi-Fi 6 Bluetooth 5.2 WLAN	M91238-005
	Intel AX211 Wi-Fi 6e Bluetooth 5.2 WLAN	M53366-005
	Realtek RTL8822CE 802.11ac 2 × 2 Wi-Fi + Bluetooth 5	L44796-005
(13)	**Battery** (3 cell, 51 Whr)	L77034-005
(14)	**Fingerprint reader** NOTE: The fingerprint reader cable is available using spare part number N10437-001.	
	Natural silver	N10420-001
	Warm gold	N10421-001
	Space blue	N10422-001
	Tranquil pink	N10423-001

Table 3-1 Computer major component descriptions and part numbers (continued)

Item	Component	Spare part number
(15)	**USB/audio board** NOTE: The USB/audio board cable is available using spare part number N10435-001.	N10419-001
(16)	**Bottom cover**	
	Natural silver	N10427-001
	Warm gold	N10428-001
	Space blue	N10429-001
	Mineral silver	N10430-001
	Tranquil pink	N10431-001

Display assembly subcomponents

To identify the display assembly subcomponents, use this illustration and table.

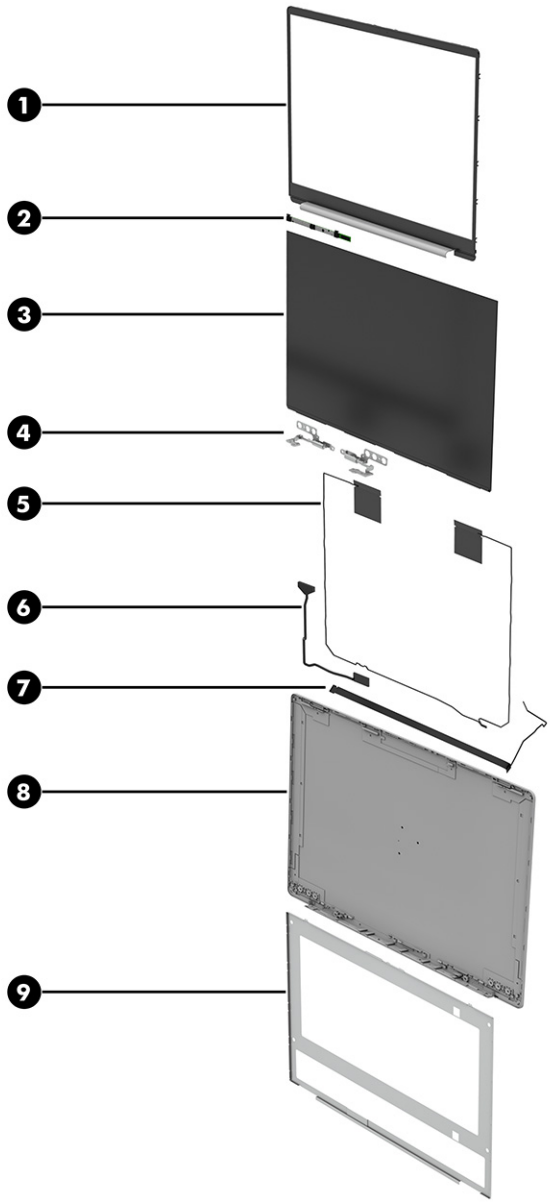

Table 3-2 **Display component descriptions and part numbers**

Item	Component	Spare part number
(1)	**Display bezel** (includes hinge cover)	
	Natural silver	N10413-001
	Warm gold	N10414-001
	Space blue	N10415-001
	Mineral silver	N10416-001
	Tranquil pink	N10417-001
(2)	**Camera module** (includes panel adhesive and left and right camera rubber)	N10426-001

Table 3-2 **Display component descriptions and part numbers (continued)**

Item	Component	Spare part number
(3)	**Display panel** (includes panel adhesive) NOTE: Panel adhesive is available as spare part number N10449-001.	
	2.2K	N10391-001
	2.8K, OLED	N10392-001
(4)	**Hinges** (includes left and right display hinges and panel adhesive)	N10412-001
(5)	**Wireless antenna kit**	N10401-001
(6)	**Display panel cable** (includes panel adhesive)	
	For use in LCD models	N10432-001
	For use in OLED models	N10433-001
(7)	**Camera cable** (includes panel adhesive)	N10434-001
(8)	**Display back cover** (includes panel adhesive)	
	For use in LCD panels:	
	• Natural silver	N10402-001
	• Warm gold	N10403-001
	• Space blue	N10404-001
	• Mineral silver	N10405-001
	• Tranquil pink	N10406-001
	For use in OLED panels:	
	• Natural silver	N10407-001
	• Warm gold	N10408-001
	• Space blue	N10409-001
	• Mineral silver	N10410-001
	• Tranquil pink	N10411-001
(9)	**OLED panel bracket**	N10425-001
*	**Panel adhesive kit**	N10449-001
*not illustrated		

Miscellaneous parts

To identify the miscellaneous parts, use this table.

Table 3-3 **Miscellaneous part descriptions and part numbers**

Component	Spare part number
AC adapters	
90 W, USB Type-C AC adapter (PFC, 3 pin, 1.8 m [6 ft])	L40893-001

Table 3-3 Miscellaneous part descriptions and part numbers (continued)

Component	Spare part number
65 W, USB Type-C AC adapter (nPFC, 3 pin, 1.8 m [6 ft])	L67440-001
Screw Kit	N10448-001
System board repair kit	N20358-888
WLAN tape kit	N19997-001
Display panel adhesive	N10449-001
Adapters	
HDMI-to-VGA	701943-001
USB-C-to-VGA	831751-001
USB-C-to-USB-A	833960-001
USB-C-to-HDMI 2.0	
USB-C-to-RJ-45	M95985-001
USB-C-to-RJ-45, FD	918779-001
USB 3.0-to-gigabit, FD	914031-001
Hub, HP USB Type-C-to-USB Type-A	916838-001
Hub, HP Elite USB-C multiport	L39572-001
HP Renew 15 gray backpack	M00093-001
Power adapter (C5)	
Japan	L33157-001
Power cords (C5, conventional, 1.0 m [3.3 ft])	
Argentina	L19357-001
Australia	L19358-001
Denmark	L19360-001
Europe (Austria, Belgium, Finland, France, Germany, the Netherlands, Norway, and Sweden)	L19361-001
India	L19363-001
Israel	L19362-001
Italy	L19364-001
Japan	L19365-001
North America	L19367-001
People's Republic of China	L19368-001
South Africa	L19369-001
South Korea	L19366-001
Switzerland	L19370-001
Taiwan	L19372-001
Thailand	M85418-001

Table 3-3 Miscellaneous part descriptions and part numbers (continued)

Component	Spare part number
United Kingdom	L19373-001
Power cords (C5, premium, 1.0 m [3.3 ft])	
Argentina	L30811-001
Australia	L22327-001
Denmark	L22322-001
Europe (Austria, Belgium, Finland, France, Germany, the Netherlands, Norway, and Sweden)	L22321-001
India	L22624-001
Israel	L22323-001
Italy	L30813-001
Japan	L22330-001
North America	L22319-001
People's Republic of China	L21930-001
South Africa	L22325-001
South Korea	L22328-001
Switzerland	L22324-001
Taiwan	L22329-001
Thailand	M85421-001
United Kingdom	L22320-001

4 Removal and replacement procedures preliminary requirements

Use this information to properly prepare to disassemble and reassemble the computer.

Tools required

You need the following tools to complete the removal and replacement procedures:

- Tweezers
- Nonconductive, nonmarking pry tool
- Magnetic Phillips P1 screwdriver
- Heat gun (to disassemble the display)

Service considerations

The following sections include some of the considerations that you must keep in mind during disassembly and assembly procedures.

NOTE: As you remove each subassembly from the computer, place the subassembly (and all accompanying screws) away from the work area to prevent damage.

Plastic parts

Using excessive force during disassembly and reassembly can damage plastic parts.

Cables and connectors

Handle cables with extreme care to avoid damage.

IMPORTANT: When servicing the computer, be sure that cables are placed in their proper locations during the reassembly process. Improper cable placement can damage the computer.

Apply only the tension required to unseat or seat the cables during removal and insertion. Handle cables by the connector whenever possible. In all cases, avoid bending, twisting, or tearing cables. Be sure that cables are routed so that they cannot be caught or snagged as you remove or replace parts. Handle flex cables with extreme care; these cables tear easily.

Drive handling

Note the following guidelines when handling drives.

IMPORTANT: Drives are fragile components. Handle them with care. To prevent damage to the computer, damage to a drive, or loss of information, observe these precautions:

- Before removing or inserting a hard drive, shut down the computer. If you are unsure whether the computer is off or in Hibernation, turn the computer on, and then shut it down through the operating system.
- Before handling a drive, be sure that you are discharged of static electricity. While handling a drive, avoid touching the connector.
- Before removing an optical drive, be sure that a disc is not in the drive, and be sure that the optical drive tray is closed.
- Handle drives on surfaces covered with at least 2.54 cm (1 inch) of shock-proof foam.
- Avoid dropping drives from any height onto any surface.
- After removing a hard drive or an optical drive, place it in a static-proof bag.
- Avoid exposing an internal hard drive to products that have magnetic fields, such as monitors or speakers.
- Avoid exposing a drive to temperature extremes or liquids.
- If a drive must be mailed, place the drive in a bubble pack mailer or other suitable form of protective packaging, and label the package “FRAGILE.”

Electrostatic discharge information

A sudden discharge of static electricity from your finger or other conductor can destroy static-sensitive devices or microcircuitry. Often the spark is neither felt nor heard, but damage occurs. An electronic device exposed to electrostatic discharge (ESD) might not appear to be affected at all and can work perfectly throughout a normal cycle. The device might function normally for a while, but it has been degraded in the internal layers, reducing its life expectancy.

Networks built into many integrated circuits provide some protection, but in many cases, the discharge contains enough power to alter device parameters or melt silicon junctions.

IMPORTANT: To prevent damage to the device when you remove or install internal components, observe these precautions:

- Keep components in their electrostatic-safe containers until you are ready to install them.
- Before touching an electronic component, discharge static electricity by using the guidelines described in Personal grounding methods and equipment on page 27.
- Avoid touching pins, leads, and circuitry. Handle electronic components as little as possible.
- If you remove a component, place it in an electrostatic-safe container.

Generating static electricity

Follow these static electricity guidelines:

- Different activities generate different amounts of static electricity.
- Static electricity increases as humidity decreases.

Table 4-1 **Static electricity occurrence based on activity and humidity**

	Relative humidity		
Event	**55%**	**40%**	**10%**
Walking across carpet	7,500 V	15,000 V	35,000 V
Walking across vinyl floor	3,000 V	5,000 V	12,000 V
Motions of bench worker	400 V	800 V	6,000 V
Removing DIPs (dual in-line packages) from plastic tube	400 V	700 V	2,000 V
Removing DIPs from vinyl tray	2,000 V	4,000 V	11,500 V
Removing DIPs from polystyrene foam	3,500 V	5,000 V	14,500 V
Removing bubble pack from PCB (printed circuit board)	7,000 V	20,000 V	26,500 V
Packing PCBs in foam-lined box	5,000 V	11,000 V	21,000 V
Multiple electric components can be packaged together in plastic tubes, trays, or polystyrene foam.			

NOTE: As little as 700 V of static electricity can degrade a product.

Preventing electrostatic damage to equipment

Many electronic components are sensitive to ESD. Circuitry design and structure determine the degree of sensitivity.

The following packaging and grounding precautions are necessary to prevent static electricity damage to electronic components:

- To avoid hand contact, transport products in static-safe containers such as tubes, bags, or boxes.
- Protect all electrostatic parts and assemblies with conductive or approved containers or packaging.
- Keep electrostatic-sensitive parts in their containers until they arrive at static-free stations.
- Place items on a grounded surface before removing them from their container.
- Always be properly grounded when touching a sensitive component or assembly.
- Avoid contact with pins, leads, or circuitry.
- Place reusable electrostatic-sensitive parts from assemblies in protective packaging or conductive foam.

Personal grounding methods and equipment

Using certain equipment can prevent static electricity damage to electronic components.

- **Wrist straps** are flexible straps with a maximum of 1 MΩ ±10% resistance in the ground cords. To provide proper ground, a strap must be worn snug against bare skin. The ground cord must be connected and fit snugly into the banana plug connector on the grounding mat or workstation.
- You can use **heel straps, toe straps, and boot straps** at standing workstations. These straps are compatible with most types of shoes or boots. On conductive floors or dissipative floor mats, use them on both feet with a maximum of 1 MΩ ±10% resistance between the operator and ground.

Table 4-2 **Static shielding protection levels**

Static shielding protection levels	
Method	**Voltage**
Antistatic plastic	1,500
Carbon-loaded plastic	7,500
Metallized laminate	15,000

Grounding the work area

To prevent static damage at the work area, follow these precautions:

- Cover the work surface with approved static-dissipative material.
- Use a wrist strap connected to a properly grounded work surface and use properly grounded tools and equipment.
- Use static-dissipative mats, foot straps, or air ionizers to give added protection.
- Handle electrostatic sensitive components, parts, and assemblies by the case or PCB laminate. Handle them only at static-free work areas.
- Turn off power and input signals before inserting and removing connectors or test equipment.
- Use fixtures made of static-safe materials when fixtures must directly contact dissipative surfaces.
- Keep the work area free of nonconductive materials, such as ordinary plastic assembly aids and polystyrene foam.
- Use conductive field service tools, such as cutters, screwdrivers, and vacuums.
- Avoid contact with pins, leads, or circuitry.

Recommended materials and equipment

HP recommends certain materials and equipment to prevent static electricity:

- Antistatic tape
- Antistatic smocks, aprons, or sleeve protectors
- Conductive bins and other assembly or soldering aids
- Conductive foam
- Conductive tabletop workstations with ground cord of 1 MΩ ±10% resistance
- Static-dissipative table or floor mats with hard tie to ground
- Field service kits
- Static awareness labels
- Wrist straps and footwear straps providing 1 MΩ ±10% resistance
- Material handling packages

- Conductive plastic bags
- Conductive plastic tubes
- Conductive tote boxes
- Opaque shielding bags
- Transparent metallized shielding bags
- Transparent shielding tubes

Cleaning your computer

Cleaning your computer regularly removes dirt and debris so that your device continues to operate at its best. Use the following information to safely clean the external surfaces of your computer.

Enabling HP Easy Clean (select products only)

HP Easy Clean helps you to avoid accidental input while you clean the computer surfaces. This software disables devices such as the keyboard, touch screen, and touchpad for a preset amount of time so that you can clean all computer surfaces.

1. Start HP Easy Clean in one of the following ways:
   - Select the **Start** menu, and then select **HP Easy Clean**.

     – or –
   - Select the **HP Easy Clean** icon in the taskbar.

     – or –
   - Select **Start**, and then select the **HP Easy Clean** tile.
2. Now that your device is disabled for a short period, see Removing dirt and debris from your computer on page 29 for the recommended steps to clean the high-touch, external surfaces on your computer. After you remove the dirt and debris, you can also clean the surfaces with a disinfectant. See Cleaning your computer with a disinfectant on page 30 for guidelines to help prevent the spread of harmful bacteria and viruses.

Removing dirt and debris from your computer

Here are the recommended steps to clean dirt and debris from your computer.

For computers with wood veneer, see Caring for wood veneer (select products only) on page 31.

1. Wear disposable gloves made of latex (or nitrile gloves, if you are latex-sensitive) when cleaning the surfaces.
2. Turn off your device and unplug the power cord and other connected external devices. Remove any installed batteries from items such as wireless keyboards.

   ⚠ **CAUTION:** To prevent electric shock or damage to components, never clean a product while it is turned on or plugged in.

3. Moisten a microfiber cloth with water. The cloth should be moist, but not dripping wet.

IMPORTANT: To avoid damaging the surface, avoid abrasive cloths, towels, and paper towels.

4. Wipe the exterior of the product gently with the moistened cloth.

IMPORTANT: Keep liquids away from the product. Avoid getting moisture in any openings. If liquid makes its way inside your HP product, it can cause damage to the product. Do not spray liquids directly on the product. Do not use aerosol sprays, solvents, abrasives, or cleaners containing hydrogen peroxide or bleach that might damage the finish.

5. Start with the display (if applicable). Wipe carefully in one direction, and move from the top of the display to the bottom. Finish with any flexible cables, like power cord, keyboard cable, and USB cables.

6. Be sure that surfaces have completely air-dried before turning the device on after cleaning.

7. Discard the gloves after each cleaning. Clean your hands immediately after you remove the gloves.

See Cleaning your computer with a disinfectant on page 30 for recommended steps to clean the high-touch, external surfaces on your computer to help prevent the spread of harmful bacteria and viruses.

Cleaning your computer with a disinfectant

The World Health Organization (WHO) recommends cleaning surfaces, followed by disinfection, as a best practice for preventing the spread of viral respiratory illnesses and harmful bacteria.

After cleaning the external surfaces of your computer using the steps in Removing dirt and debris from your computer on page 29, Caring for wood veneer (select products only) on page 31, or both, you might also choose to clean the surfaces with a disinfectant. A disinfectant that is within HP's cleaning guidelines is an alcohol solution consisting of 70% isopropyl alcohol and 30% water. This solution is also known as rubbing alcohol and is sold in most stores.

Follow these steps when disinfecting high-touch, external surfaces on your computer:

1. Wear disposable gloves made of latex (or nitrile gloves, if you are latex-sensitive) when cleaning the surfaces.

2. Turn off your device and unplug the power cord and other connected external devices. Remove any installed batteries from items such as wireless keyboards.

CAUTION: To prevent electric shock or damage to components, never clean a product while it is turned on or plugged in.

3. Moisten a microfiber cloth with a mixture of 70% isopropyl alcohol and 30% water. The cloth should be moist, but not dripping wet.

CAUTION: Do not use any of the following chemicals or any solutions that contain them, including spray-based surface cleaners: bleach, peroxides (including hydrogen peroxide), acetone, ammonia, ethyl alcohol, methylene chloride, or any petroleum-based materials, such as gasoline, paint thinner, benzene, or toluene.

IMPORTANT: To avoid damaging the surface, avoid abrasive cloths, towels, and paper towels.

4. Wipe the exterior of the product gently with the moistened cloth.

IMPORTANT: Keep liquids away from the product. Avoid getting moisture in any openings. If liquid makes its way inside your HP product, it can cause damage to the product. Do not spray liquids directly

on the product. Do not use aerosol sprays, solvents, abrasives, or cleaners containing hydrogen peroxide or bleach that might damage the finish.

5. Start with the display (if applicable). Wipe carefully in one direction, and move from the top of the display to the bottom. Finish with any flexible cables, like power cord, keyboard cable, and USB cables.
6. Be sure that surfaces have completely air-dried before turning the device on after cleaning.
7. Discard the gloves after each cleaning. Clean your hands immediately after you remove the gloves.

Caring for wood veneer (select products only)

Your product might feature high-quality wood veneer. As with all natural wood products, proper care is important for best results over the life of the product. Because of the nature of natural wood, you might see unique variations in the grain pattern or subtle variations in color, which are normal.

- Clean the wood with a dry, static-free microfiber cloth or chamois.
- Avoid cleaning products containing substances such as ammonia, methylene chloride, acetone, turpentine, or other petroleum-based solvents.
- Do not expose the wood to sun or moisture for long periods of time.
- If the wood becomes wet, dry it by dabbing with an absorbent, lint-free cloth.
- Avoid contact with any substance that might dye or discolor the wood.
- Avoid contact with sharp objects or rough surfaces that might scratch the wood.

See Removing dirt and debris from your computer on page 29 for the recommended steps to clean the high-touch, external surfaces on your computer. After you remove the dirt and debris, you can also clean the surfaces with a disinfectant. See Cleaning your computer with a disinfectant on page 30 for sanitizing guidelines to help prevent the spread of harmful bacteria and viruses.

Packaging and transporting guidelines

Follow these grounding guidelines when packaging and transporting equipment:

- To avoid hand contact, transport products in static-safe tubes, bags, or boxes.
- Protect ESD-sensitive parts and assemblies with conductive or approved containers or packaging.
- Keep ESD-sensitive parts in their containers until the parts arrive at static-free workstations.
- Place items on a grounded surface before removing items from their containers.
- Always be properly grounded when touching a component or assembly.
- Store reusable ESD-sensitive parts from assemblies in protective packaging or nonconductive foam.
- Use transporters and conveyors made of antistatic belts and roller bushings. Be sure that mechanized equipment used for moving materials is wired to ground and that proper materials are selected to avoid static charging. When grounding is not possible, use an ionizer to dissipate electric charges.

Accessing support information

To find the HP support that you need, use this information.

Table 4-3 Support information locations

Service consideration	Path to access information
Records of reported failure incidents stored on the computer	**Windows:** Pre-operating system failures are logged in the BIOS Event Log. To view the BIOS Event Log: 1. Press the power button. 2. Immediately and repeatedly press esc when the power button light turns white. **NOTE:** If you do not press esc at the appropriate time, you must restart the computer and again repeatedly press esc when the power button light turns white to access the utility. 3. Press f10 to enter the BIOS setup. 4. (On commercial products) Under the **Main** tab, select **BIOS event log**, and then select **View BIOS Event Log**. - or - (On consumer products) Under the **Main** tab, select **System Log**. Post-operating system failures are logged in the Event Viewer. 1. Turn on the computer and allow the operating system to open. 2. Select the search icon in the taskbar. 3. Type `Event Viewer`, and then press enter. 4. Select the log from the left panel. Details display in the right panel. **Chrome:** 1. Go to support.google.com/chrome. 2. Search `collect Chrome device logs`.
Technical bulletins	To locate technical bulletins: 1. Go to www.hp.com. 2. Place the cursor over **Problem solving** to display more options. 3. Select **Support & Troubleshooting**. 4. Type the serial number, product number, or product name to go to the product support page. 5. Select **Advisories** to view technical bulletins.
Repair professionals	To locate repair professionals: 1. Go to www.hp.com. 2. Place the cursor over **Support resources** to display more options. 3. Select **Authorized service providers**.

Table 4-3 Support information locations (continued)

Service consideration	Path to access information
Component and diagnosis information, failure detection, and required action	To locate diagnosis information and actions: 1. Go to http://www.hp.com/go/techcenter/pcdiags. 2. Select **Get Support**. 3. Near the bottom of the window, select **Notebook PCs**, and then select your location.

5 Removal and replacement procedures for authorized service provider parts

This chapter provides removal and replacement procedures for authorized service provider parts.

IMPORTANT: Only an authorized service provider should access the components described in this chapter. Accessing these parts can damage the computer or void the warranty.

NOTE: Details about your computer, including model, serial number, product key, and length of warranty, are on the service tag at the bottom of your computer.

Component replacement procedures

To remove and replace computer components, use the procedures described in this section.

NOTE: HP continually improves and changes product parts. For complete and current information about supported parts for your computer, go to http://partsurfer.hp.com, select your country or region, and then follow the on-screen instructions.

Make special note of each screw size and location during removal and replacement.

Preparation for disassembly

To remove and replace computer components, use these procedures:

For initial safety procedures, see Removal and replacement procedures preliminary requirements on page 25.

1. Turn off the computer. If you are unsure whether the computer is off or in Hibernation, turn the computer on, and then shut it down through the operating system.
2. Disconnect the power from the computer by unplugging the power cord from the computer.
3. Disconnect all external devices from the computer.

Bottom cover

To remove the bottom cover, use this procedure and illustration.

Table 5-1 Bottom cover description and part number

Description	Spare part number
Bottom cover, natural silver	N10427-001
Bottom cover, warm gold	N10428-001
Bottom cover, space blue	N10429-001
Bottom cover, mineral silver	N10430-001
Bottom cover, tranquil pink	N10431-001

Before removing the bottom cover, prepare the computer for disassembly (see Preparation for disassembly on page 34).

Remove the bottom cover:

1. Remove the two Phillips M2.5 × 6.0 screws **(1)** from the top and the two Phillips M2.0 × 4.0 screws **(2)** from the bottom of the bottom cover.

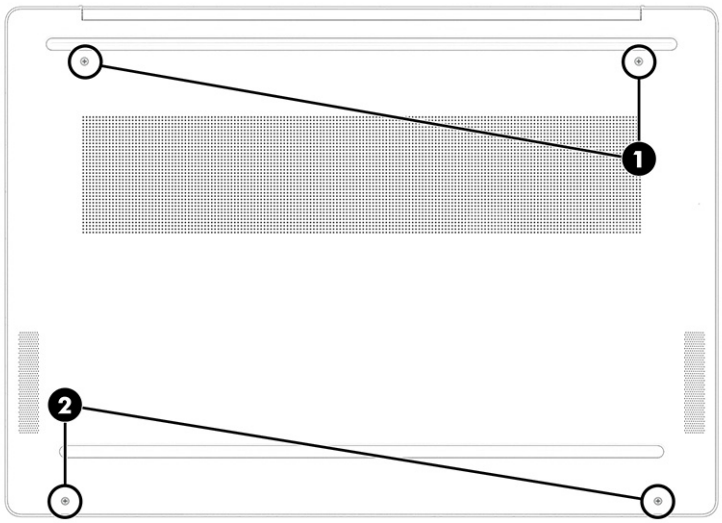

2. Starting near the hinges, use a plastic tool **(1)** to release the bottom cover from the computer **(2)**, and then remove it **(3)**.

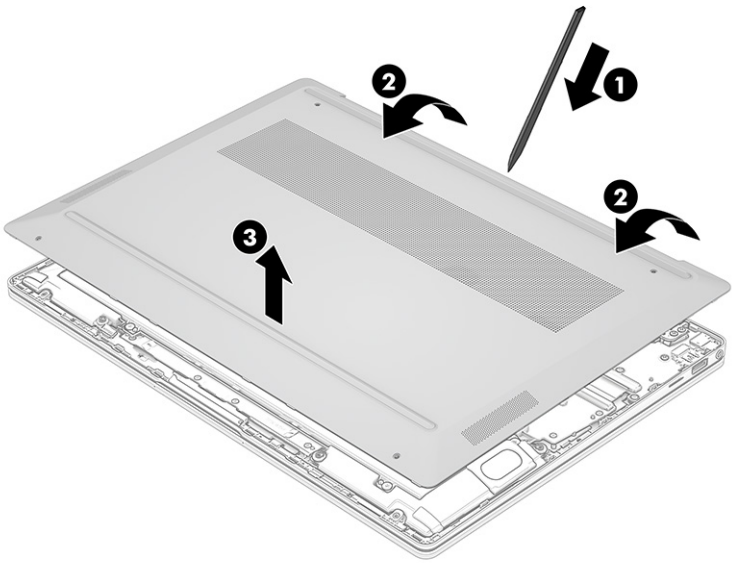

To replace the bottom cover, reverse the removal procedures.

Battery

To remove the battery, use this procedure and illustration.

Table 5-2 **Battery description and part number**

Description	Spare part number
3 cell, 51 Whr, Li-ion battery	L77034-005

WARNING! To avoid personal injury and damage to the product:

- Do *not* puncture, twist, or crack the battery.
- Do *not* cause an external puncture or rupture to the battery. They can cause a short inside the battery, which can result in battery thermal runaway.
- Do *not* handle or touch the battery enclosure with sharp objects such as tweezers or pliers, which might puncture the battery.
- Do *not* compress or squeeze the battery case with tools or heavy objects stacked on top of the case. These actions can apply undue force on the battery.
- Do *not* touch the connectors with any metallic surface or object, such as metal tools, screws, or coins, which can cause shorting across the connectors.

Before removing the battery, follow these steps:

1. Prepare the computer for disassembly (see Preparation for disassembly on page 34).
2. Remove the bottom cover (see Bottom cover on page 34).

WARNING! To reduce potential safety issues, use only the user-replaceable battery provided with the computer, a replacement battery provided by HP, or a compatible battery purchased from HP.

IMPORTANT: Removing a battery that is the sole power source for the computer can cause loss of information. To prevent loss of information, save your work or shut down the computer through Windows before you remove the battery.

Remove the battery:

1. Remove the tape that secures the speaker cable to the battery **(1)**.
2. Remove the five Phillips M2.0 × 3.5 screws **(2)** that secure the battery to the computer.

3. Remove the speaker cable from the clips along the bottom of the battery **(3)**.

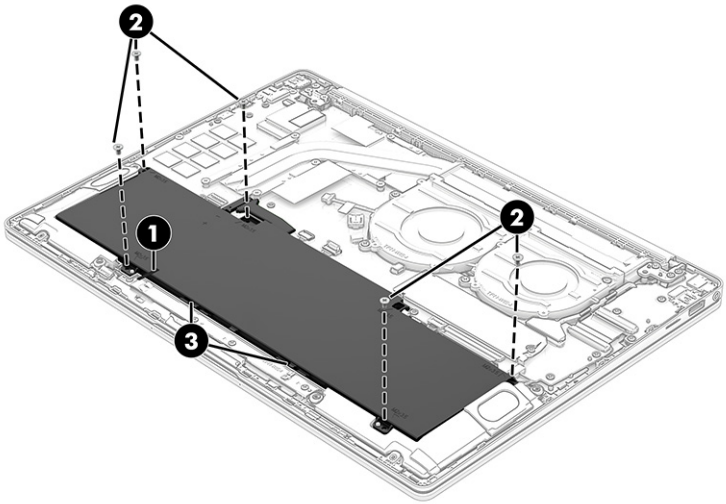

4. Lift the bottom of the battery upward **(1)**, and then remove the battery from the computer **(2)**.

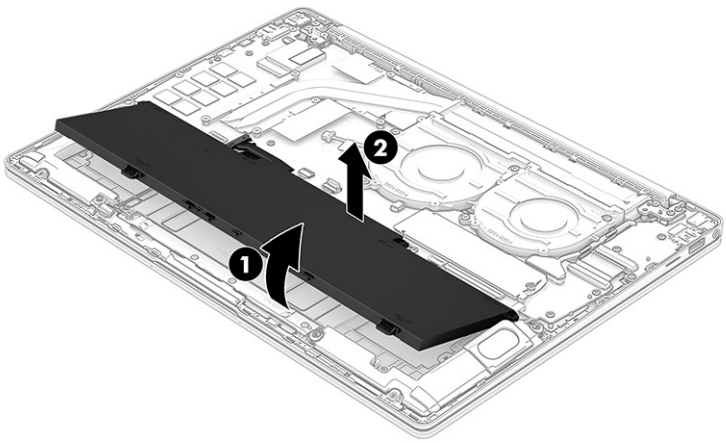

To replace the battery, reverse the removal procedures.

Touchpad

To remove the touchpad, use this procedure and illustration.

Table 5-3 **Touchpad description and part number**

Description	Spare part number
Touchpad, natural silver	N13473-001
Touchpad, warm gold	N13474-001
Touchpad, space blue	N13475-001
Touchpad, mineral silver	N13476-001
Touchpad, tranquil pink	N13477-001

Table 5-3 **Touchpad description and part number (continued)**

Description	Spare part number
Touchpad cable	N10436-001

Before removing the touchpad, follow these steps:

1. Prepare the computer for disassembly (see Preparation for disassembly on page 34).
2. Remove the bottom cover (see Bottom cover on page 34).
3. Remove the battery (see Battery on page 35).

Remove the touchpad:

1. Remove the four Phillips M2.0 × 2.5 screws **(1)** from the touchpad bracket, and then remove the bracket from the computer **(2)**.

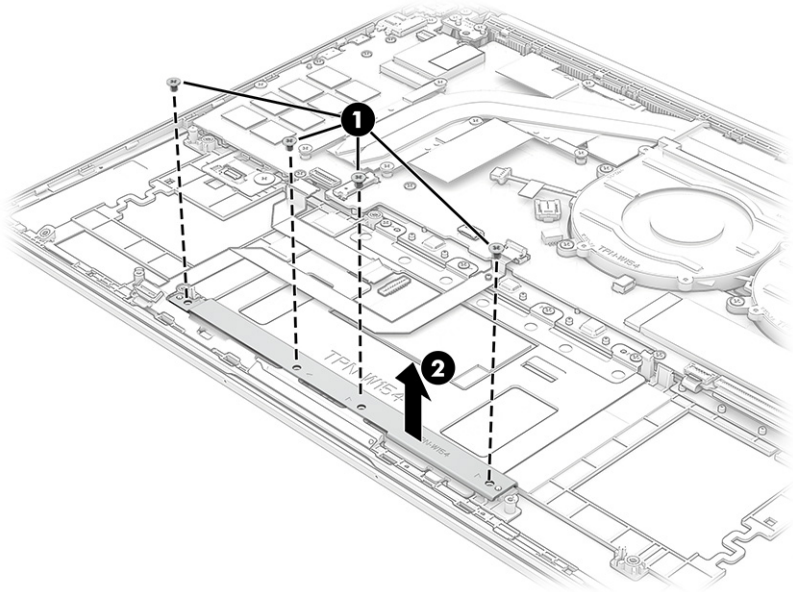

2. Disconnect the touchpad cable from the ZIF connector on the touchpad **(1)**, and remove the cable from the touchpad **(2)**.

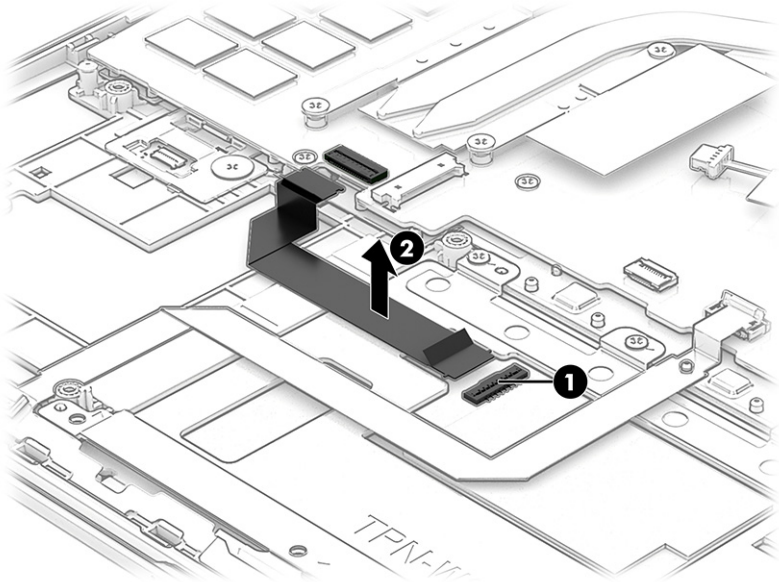

3. Lift the fingerprint reader cable off the touchpad.
4. Lift the shielding from the top of the touchpad **(1)**.
5. Remove the four broadhead Phillips M2.0 × 2.5 screws **(2)** from the touchpad.
6. Lift the top of the touchpad up **(3)**, and then pull it away from the bottom of the computer to remove it **(4)**.

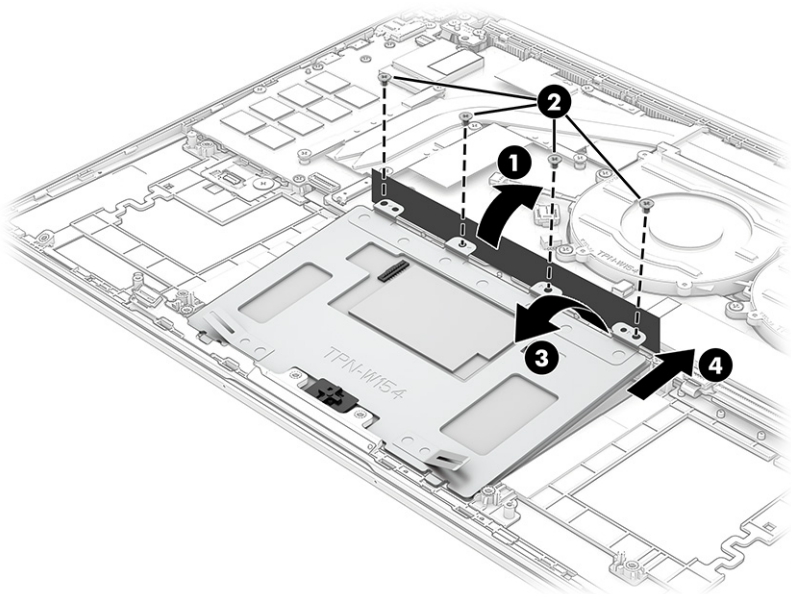

Reverse this procedure to install the touchpad.

WLAN module

To remove the WLAN module, use this procedure and illustration.

Table 5-4 WLAN module descriptions and part numbers

Description	Spare part number
Realtek 8852BE Wi-Fi 6 Bluetooth 5.2 WLAN	M91238-005
Intel AX211 Wi-Fi 6e Bluetooth 5.2 WLAN	M53366-005
Realtek RTL8822CE 802.11ac 2 × 2 Wi-Fi + Bluetooth 5	L44796-005
WLAN module tape kit (includes conductive tape, gasket, and Mylar)	N19997-001

IMPORTANT: To prevent an unresponsive system, replace the wireless module only with a wireless module authorized for use in the computer by the governmental agency that regulates wireless devices in your country or region. If you replace the module and then receive a warning message, remove the module to restore device functionality, and then contact technical support.

Before removing the WLAN module, follow these steps:

1. Prepare the computer for disassembly (see Preparation for disassembly on page 34).
2. Remove the bottom cover (see Bottom cover on page 34).
3. Remove the battery (see Battery on page 35).

Remove the WLAN module:

1. Remove the plastic antenna protector from the module **(1)**.
2. Carefully disconnect the antenna cables from the module **(2)**.
3. Remove the Phillips M2.0 × 2.5 screw **(3)**, and then remove the WLAN module **(4)**.

NOTE: When connecting the antenna cables, be sure to match the number or letter on the cable with the appropriate connector on the module.

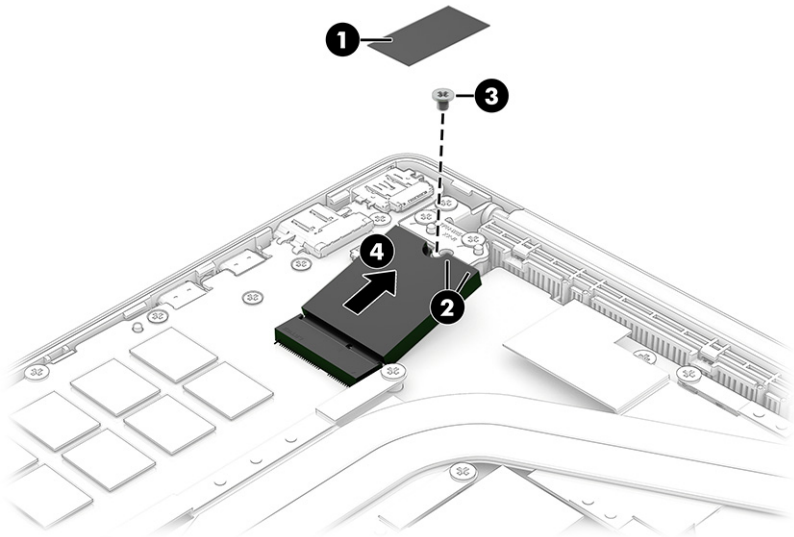

4. If the WLAN antenna is not connected to the terminal on the WLAN module, you must install a protective sleeve on the antenna connector, as shown in the following illustration.

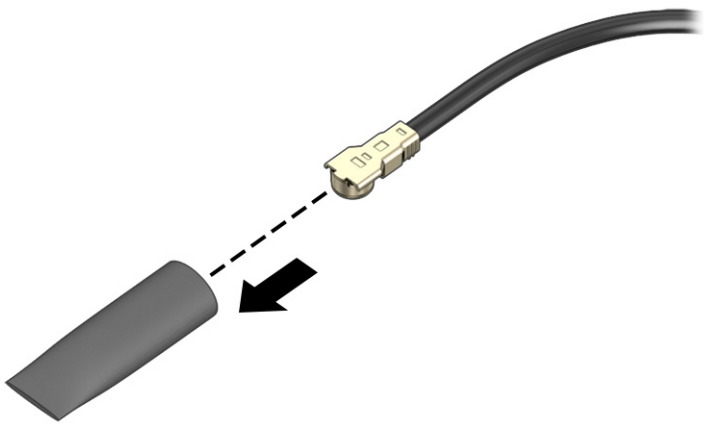

Reverse this procedure to install the WLAN module.

Solid-state drive

To remove the M.2 solid-state drive, use this procedure and illustration.

Table 5-5 **Solid-state drive descriptions and part numbers**

Description	Spare part number
1 TB	L85370-005
512 GB	L85364-005
512 GB, TLC	M17436-005

Table 5-5 **Solid-state drive descriptions and part numbers (continued)**

Description	Spare part number
256 GB	L85354-005
Solid-state drive thermal pad	M46333-001

Before removing the solid-state drive, follow these steps:

1. Prepare the computer for disassembly (see Preparation for disassembly on page 34).
2. Remove the bottom cover (see Bottom cover on page 34).
3. Remove the battery (see Battery on page 35).

Remove the solid-state drive:

1. Remove the Phillips M2.0 × 2.0 screw **(1)** that secures the cover.
2. Remove the cover from the drive **(2)**.

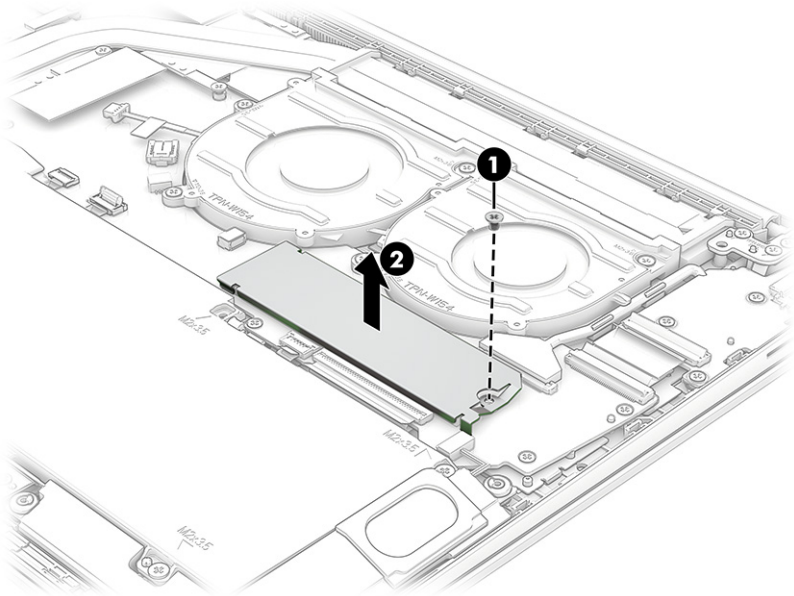

3. Pull the drive away from the socket to remove it.

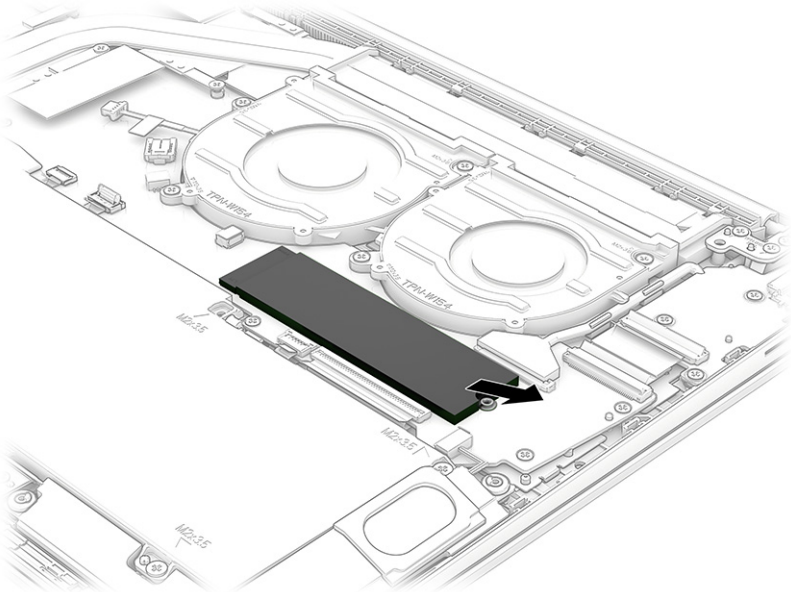

4. When installing a solid-state drive, be sure a thermal pad is installed on the bottom of the cover.

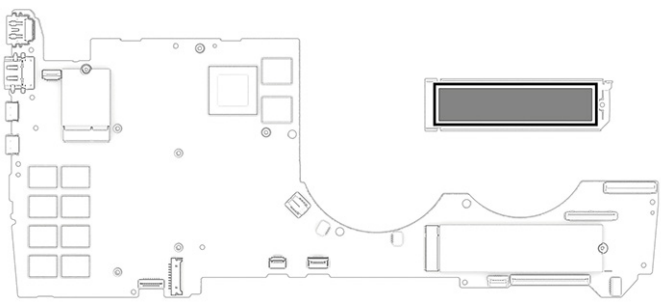

To install the solid-state drive, reverse the removal procedures.

NOTE: Solid-state drives are designed with a notch to prevent incorrect insertion.

Speakers

To remove the speakers, use this procedure and illustration.

Table 5-6 Speaker description and part number

Description	Spare part number
Speaker Kit	N10447-001

Before removing the speakers, follow these steps:

1. Prepare the computer for disassembly (see Preparation for disassembly on page 34).
2. Remove the bottom cover (see Bottom cover on page 34).

3. Remove the battery (see Battery on page 35).

Remove the speakers:

1. Disconnect the speaker cable from the system board **(1)**.
2. Remove the speaker cable from the clips along the bottom of the battery **(2)**.
3. Remove the speakers from the computer **(3)**.

NOTE: When installing the speakers, be sure that the speakers fit completely onto the posts **(4)**.

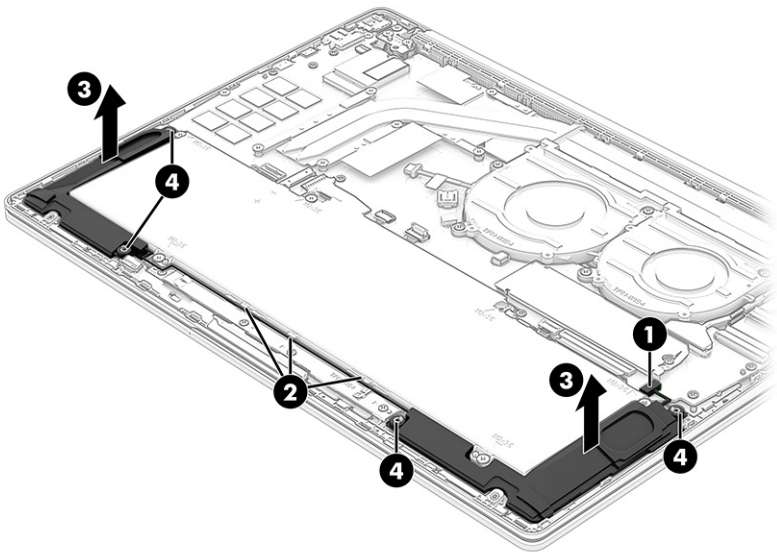

Reverse this procedure to install the speakers.

USB/audio board

To remove the USB/audio board, use this procedure and illustration.

Table 5-7 USB/audio board description and part number

Description	Spare part number
USB/audio board	N10419-001
USB/audio board cable	N10435-001

Before removing the USB/audio board, follow these steps:

1. Prepare the computer for disassembly (see Preparation for disassembly on page 34).
2. Remove the bottom cover (see Bottom cover on page 34).
3. Remove the battery (see Battery on page 35).
4. Remove the left speaker (see Speakers on page 43).

Remove the USB/audio board:

1. Disconnect the cable from the ZIF connector on the board **(1)**.
2. Remove the three Phillips M2.0 × 2.5 screws **(2)** that secure the board to the computer.
3. Push the display cable back slightly so it does not impede board removal **(3)**.
4. If installed, remove the card from the board **(4)**.
5. Remove the board from the computer **(5)**.

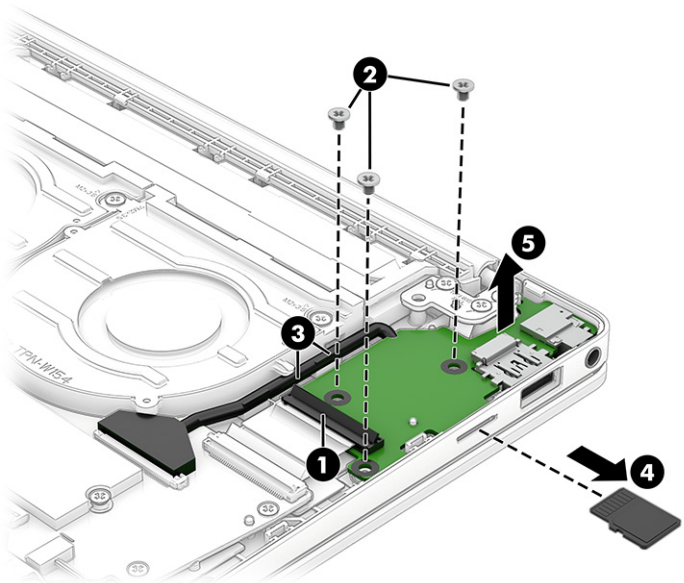

Reverse this procedure to install the USB/audio board.

Fingerprint reader

To remove the fingerprint reader, use this procedure and illustration.

Table 5-8 Fingerprint reader description and part number

Description	Spare part number
Fingerprint reader, natural silver	N10420-001
Fingerprint reader, warm gold	N10421-001
Fingerprint reader, space blue	N10422-001
Fingerprint reader, tranquil pink	N10423-001
Fingerprint reader cable	N10437-001

Before removing the fingerprint reader, follow these steps:

1. Prepare the computer for disassembly (see Preparation for disassembly on page 34).
2. Remove the bottom cover (see Bottom cover on page 34).
3. Remove the battery (see Battery on page 35).
4. Remove the fan (see Fan on page 46).

5. Remove the system board (see System board on page 49).

Remove the fingerprint reader:

1. Remove the Phillips M2.0 × 2.0 screw **(1)** that secures the fingerprint reader bracket to the computer.
2. Lift the right side of the bracket up **(2)**, and then remove it from the computer **(3)**.
3. Disconnect the cable from the ZIF connector on the fingerprint reader **(4)**.
4. Remove the fingerprint reader from the computer **(5)**.

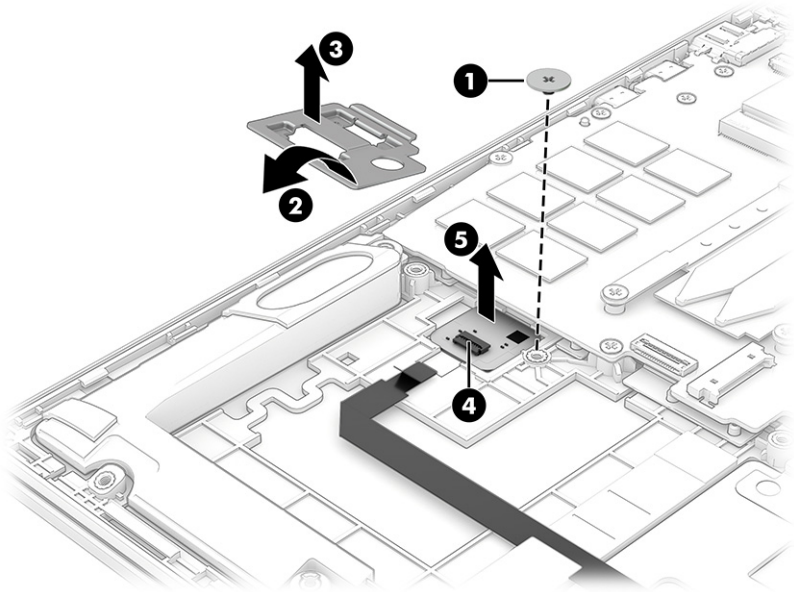

Reverse this procedure to install the fingerprint reader.

Fan

To remove the fan, use this procedure and illustration.

Table 5-9 Fan description and part number

Description	Spare part number
Fan for use on graphics processing unit	N10439-001
Fan for use on main processor	N10440-001

Before removing the fan, follow these steps:

1. Prepare the computer for disassembly (see Preparation for disassembly on page 34).
2. Remove the bottom cover (see Bottom cover on page 34).
3. Remove the battery (see Battery on page 35).

Remove the fan:

1. Remove the five Phillips M2.0 × 3.5 screws **(1)** that secure the fan to the computer.

2. Disconnect the fan cables from the system board **(2)**.

3. Remove the fans from the computer **(3)**.

NOTE: The graphics fan is on the right in the following illustration.

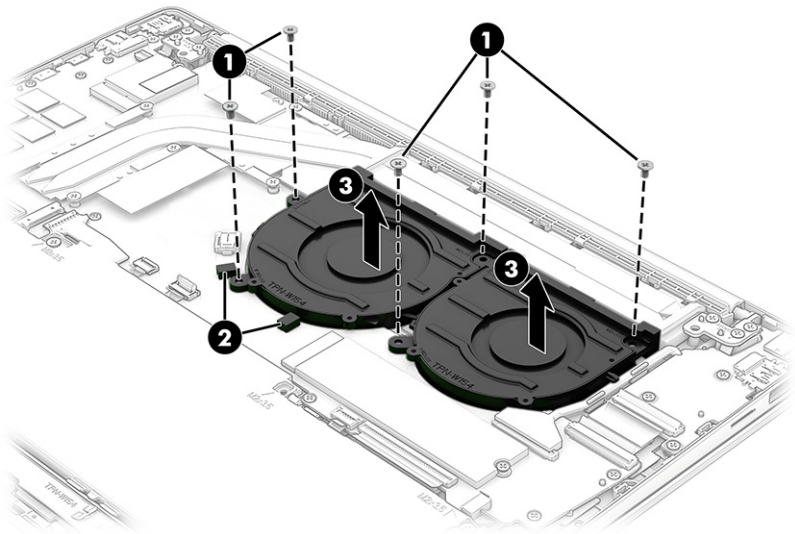

Reverse this procedure to install the fan.

Heat sink

To remove the heat sink, use these procedures and illustrations.

Table 5-10 **Heat sink descriptions and part numbers**

Description	Spare part number
Heat sink for use in models with discrete graphics	N10442-001
Heat sink for use in models with UMA graphics	N10443-001
Heat sink for use in models with UMA graphics and a 45 W processor (i7-12700H or i5-12500H)	N10444-001
Thermal pads	N10446-001

Before removing the heat sink, follow these steps:

1. Prepare the computer for disassembly (see Preparation for disassembly on page 34).

2. Remove the bottom cover (see Bottom cover on page 34).

3. Remove the battery (see Battery on page 35).

Remove the heat sink:

1. **UMA models:** Remove the protective covering from the heat sink **(1)**.

2. In the order indicated on the heat sink, remove the four Phillips M2.0 × 2.0 screws **(2)** that secure the heat sink to the system board.

3. Remove the heat sink **(3)**.

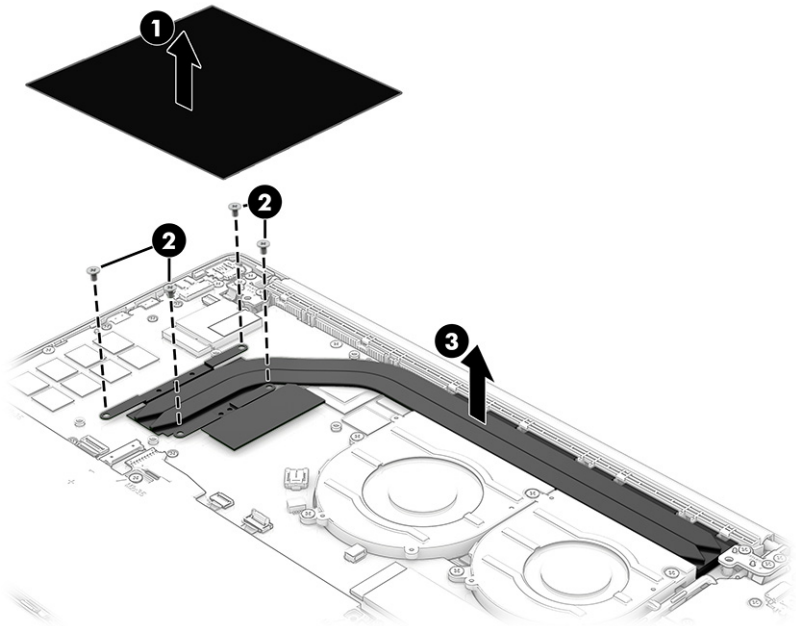

4. Thoroughly clean the thermal material from the surfaces of the heat sink and the system board components each time the heat sink is removed. Replacement thermal material is included with the heat sink and system board spare part kits.

   Thermal paste is used on the integrated system board processor **(1)**.

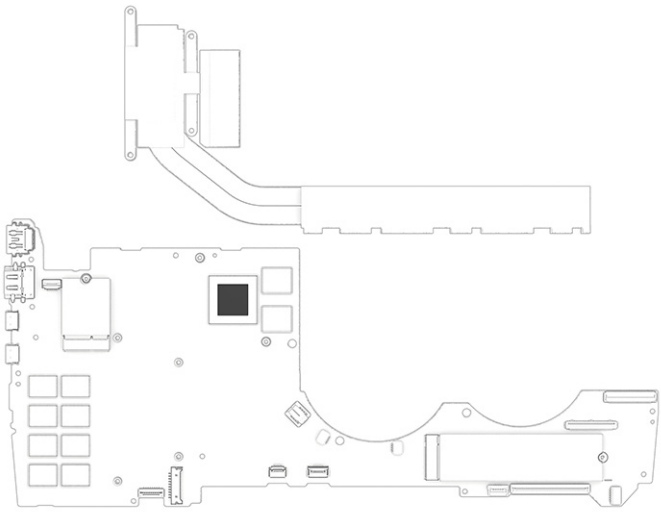

5. **Discrete models:** Remove the protective covering from the heat sink **(1)**.

6. In the order indicated on the heat sink, remove the six Phillips M2.0 × 2.0 screws **(2)** that secure the heat sink to the system board.

7. Remove the heat sink **(3)**.

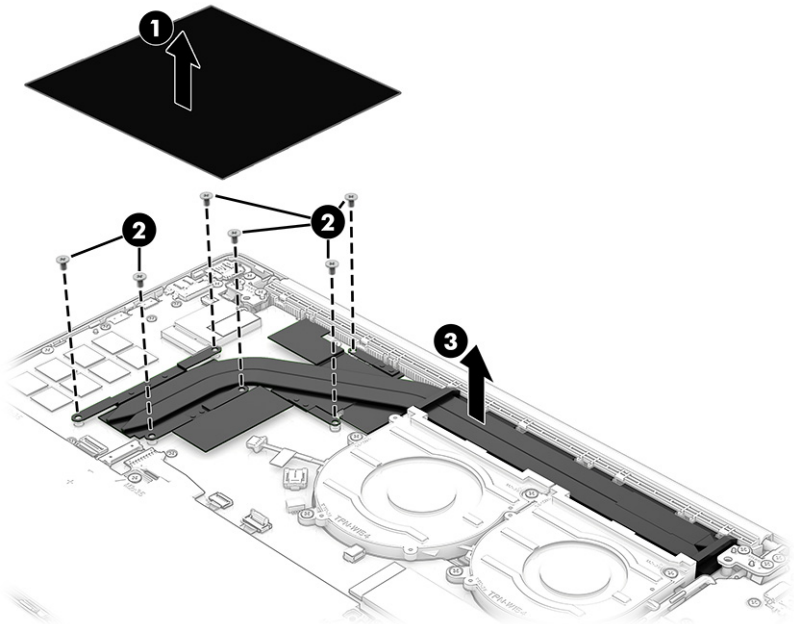

8. Thoroughly clean the thermal material from the surfaces of the heat sink and the system board components each time the heat sink is removed. Replacement thermal material is included with the heat sink and system board spare part kits.

   Thermal paste is used on the integrated system board processor **(1)**.

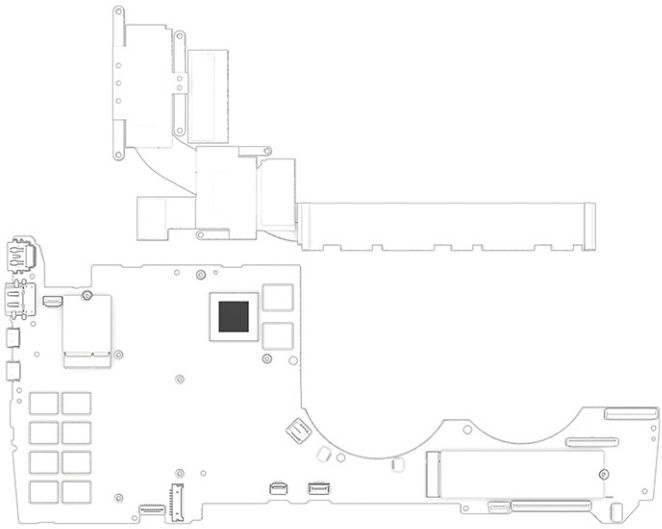

Reverse this procedure to install the heat sink.

System board

To remove the system board, use these procedures and illustrations.

Table 5-11 **System board descriptions and part numbers**

Description	Spare part number
System board (includes processor): All system boards use the following part numbers: xxxxxx-001: Non-Windows operating system xxxxxx-601: Windows 10 operating system NOTE: The system board repair kit is available as spare part number N20358-888.	
System board for use in models with discrete graphics memory	
• Intel Core i7-1255U processor and 16 GB of system memory (OLED models)	N10390-xx1
• Intel Core i5-1235U processor and 16 GB of system memory	N10387-xx1
• Intel Core i5-1235U processor and 16 GB of system memory (OLED models)	N10389-xx1
System board for use in models with UMA graphics memory	
• Intel Core i7-12700H processor and 16 GB of system memory (OLED models)	N10386-xx1
• Intel Core i5-12500H processor and 16 GB of system memory (OLED models)	N10385-xx1
• Intel Core i5-12500H processor and 16 GB of system memory	N10384-xx1
• Intel Core i5-1240P processor and 16 GB of system memory	N10383-xx1
• Intel Core i5-1240P processor and 8 GB of system memory	N10382-xx1

Before removing the system board, follow these steps:

1. Prepare the computer for disassembly (see Preparation for disassembly on page 34).
2. Remove the bottom cover (see Bottom cover on page 34).
3. Remove the battery (see Battery on page 35).
4. Remove the fan (see Fan on page 46).

When you replace the system board, be sure to remove the following components (as applicable) from the defective system board and install them on the replacement system board:

- WLAN module (see WLAN module on page 40).
- Solid-state drive (see Solid-state drive on page 41).
- Heat sink (see Heat sink on page 47).

Remove the system board:

1. Disconnect the following cables from the system board:
   - Camera cable (ZIF) **(1)**
   - WLAN antennas from the WLAN module **(2)**
   - USB/audio board cable (ZIF) **(3)**
   - Display cable (ZIF) **(4)**

- Speaker cable **(5)**
- Keyboard cable (ZIF) **(6)**
- Keyboard backlight cable (ZIF) **(7)** (select products only)
- Fingerprint reader cable (ZIF) **(8)** (select products only)
- Touchpad cable (ZIF) **(9)**

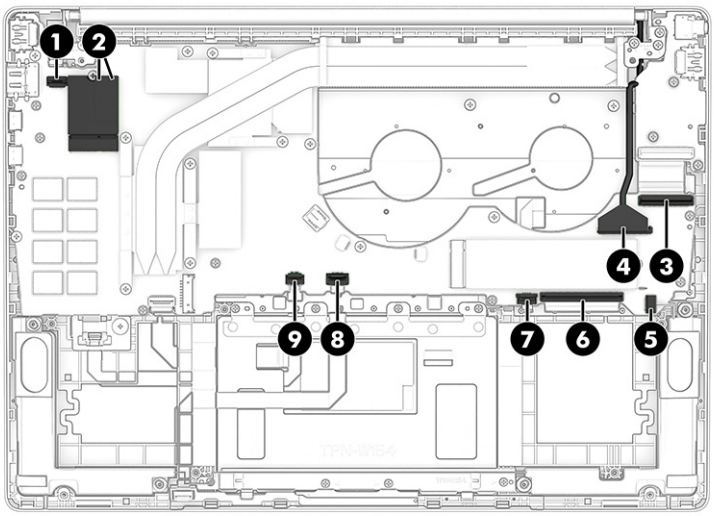

2. Remove the three Phillips M2.0 × 3.5 screws **(1)** that secure the system board to the computer.
3. Remove the eight Phillips M2.0 × 2.5 screws **(2)** that secure the system board to the computer.

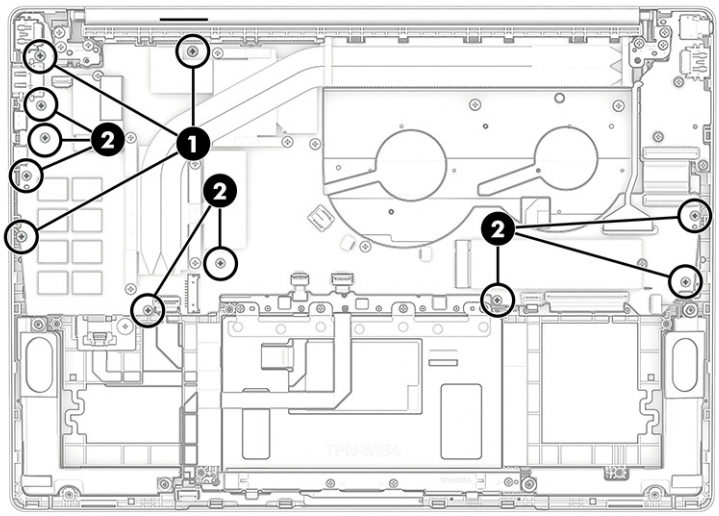

4. Lift the right side of system board **(1)**, and then pull the system board right and away from the connectors to remove it from the computer **(2)**.

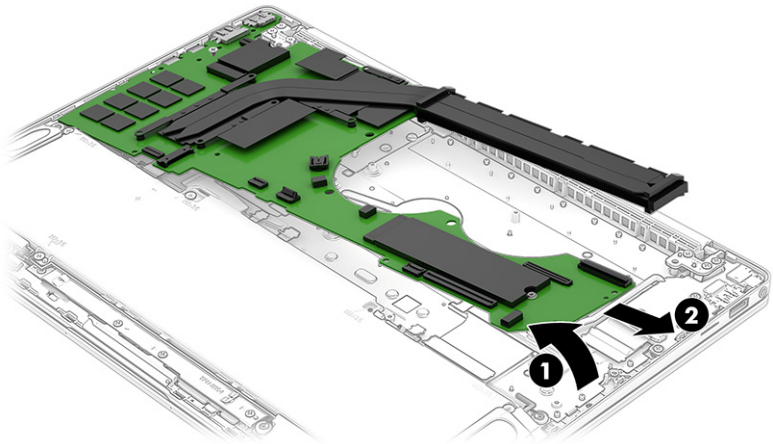

Reverse this procedure to install the system board.

Display assembly

To remove and disassemble the display assembly, use these procedures and illustrations.

NOTE: The display assembly is spared at the subcomponent level. For display assembly spare part information, see the individual removal subsections.

Before removing the display panel, follow these steps:

1. Prepare the computer for disassembly (see Preparation for disassembly on page 34).
2. Remove the bottom cover (see Bottom cover on page 34).
3. Remove the battery (see Battery on page 35).

Remove the display assembly:

1. Disconnect the camera cable from the system board ZIF connector **(1)**.
2. Disconnect the WLAN antenna cables **(2)** from the terminals on the WLAN module.
3. Disconnect the display cable from the system board **(3)**.

4. Release the display cable from the retention clips along the right side of the fan **(4)**.

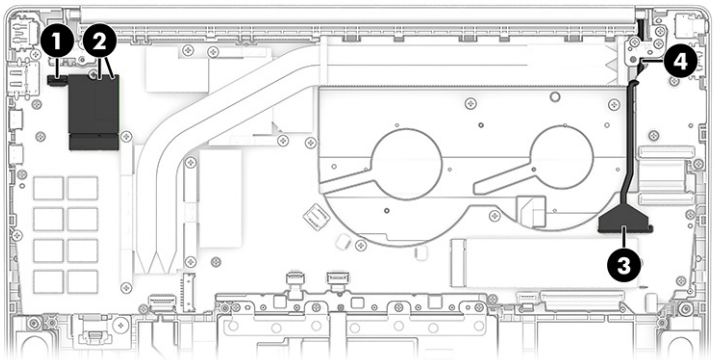

5. Remove the six Phillips M2.5 × 4.5 screws **(1)** that secure the display assembly to the computer.
6. Open the display to open the hinges **(2)**.
7. Separate the display from the computer **(3)**.

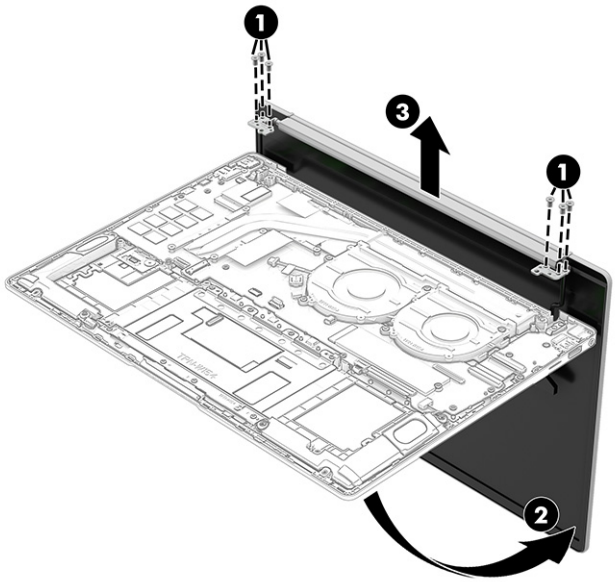

8. If you need to remove the display bezel:
   a. Use a heat gun **(1)** to heat the bezel for 30 seconds before removal.
   b. Release the top of the bezel from the middle outward **(2)**.
   c. Release the left **(3)** and right **(4)** edges of the bezel.
   d. Release the bottom edge of the display bezel from left to right **(5)**, and then remove the bezel.

      Display adhesive is available in the Adhesive Kit as spare part number M17753-001.

      The bezel is available as the following spare part numbers:

      N10413-001: Natural silver

      N10414-001: Warm gold

N10415-001: Space blue

N10416-001: Mineral silver

N10417-001: Tranquil pink

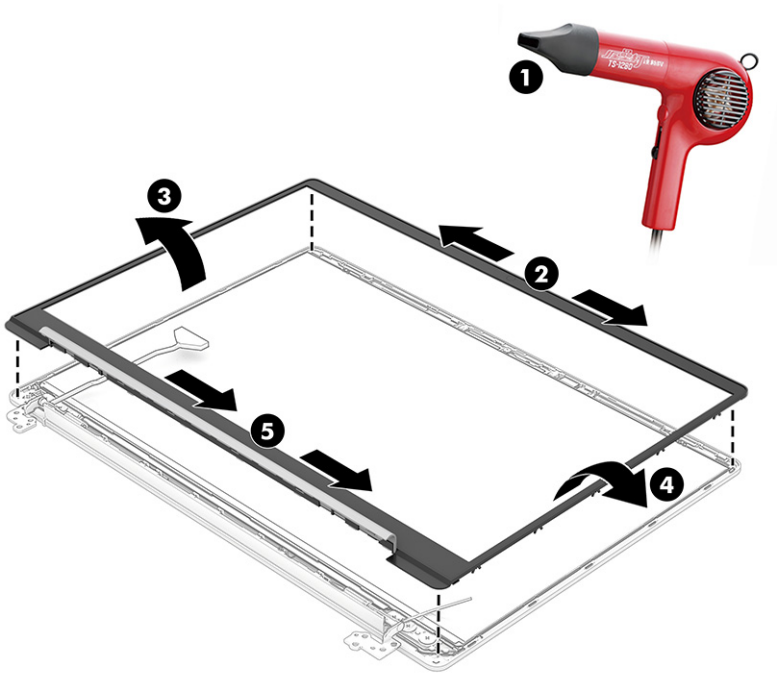

9. If you need to remove the display panel:

   a. The display panel is secured to the display enclosure with tape that is installed under the left and right sides of the panel. To remove the panel, use tweezers to grasp the end of the tape **(1)**. While turning the tweezers, wrap the tape around the tweezers **(2)** as you continue to pull the tape out from behind the display panel **(3)**. You must pull the tape multiple times before it is completely removed.

   b. Rotate the display panel over and place it next to the display enclosure **(4)**.

   NOTE: Pull the tape out slowly and evenly to prevent it from breaking prematurely.

   Display adhesive is available as spare part number N10449-001.

   Display panels are available as the following spare part numbers:

   N10391-001: 2.2K

   N10392-001: 2.8K, OLED

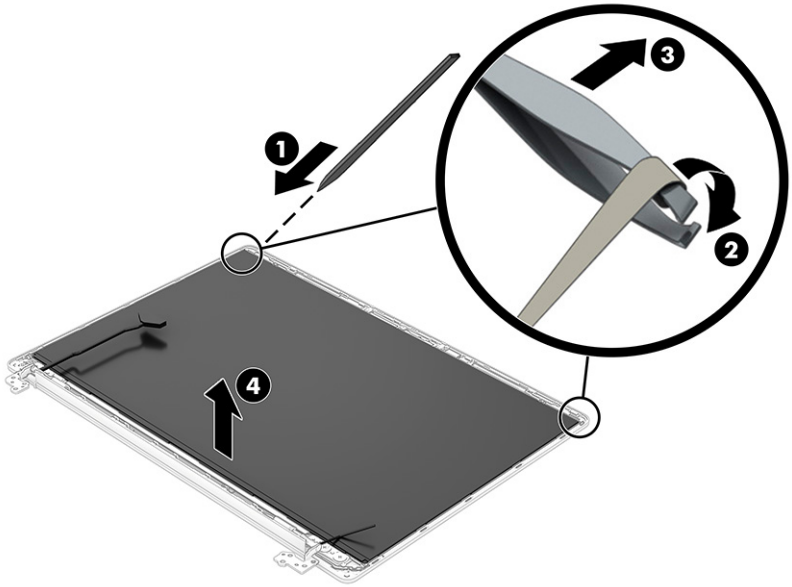

c. Release the adhesive support strip **(1)** that secures the display panel cable connector to the display panel.

d. Disconnect the display panel cable **(2)** from the display panel.

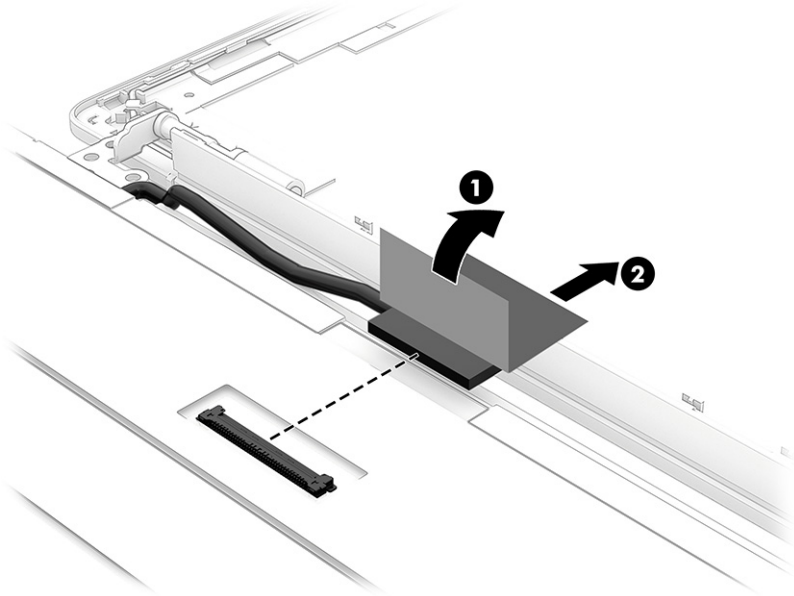

e. When installing a new display panel, install the panel adhesive strips along the sides on the display back cover as shown in the following illustration.

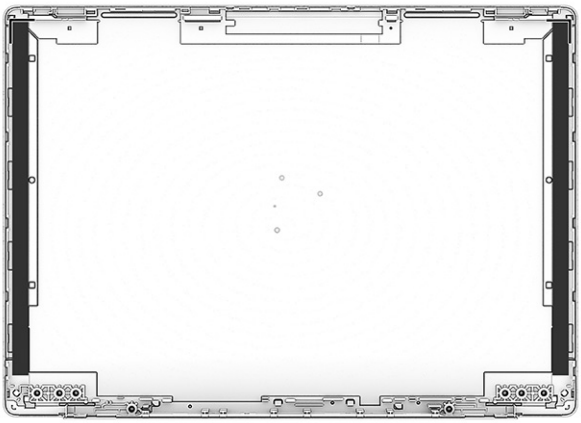

10. If you need to remove the camera module:

    a. Use a tool to detach the camera module **(1)** from the display back cover. (The module is attached with double-sided adhesive.)

    b. Disconnect the cable from the module **(2)**. Note that the cable routes under module.

    The camera module is available as spare part number N10426-001.

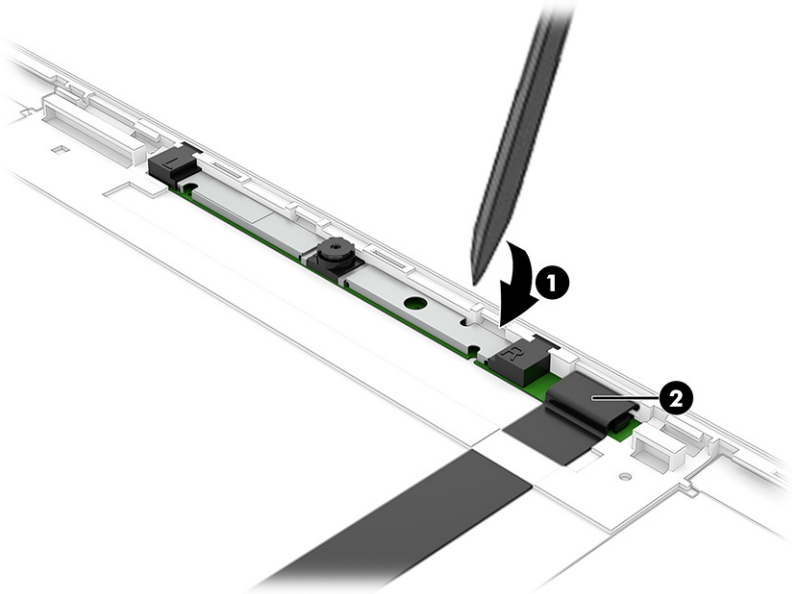

11. If you need to remove the camera cable, remove the cable from the hinge **(1)**, peel the cable off the inside of the display back cover **(2)**, and then disconnect the cable from the camera module **(3)**.

    The camera cable is available as spare part number N10434-001.

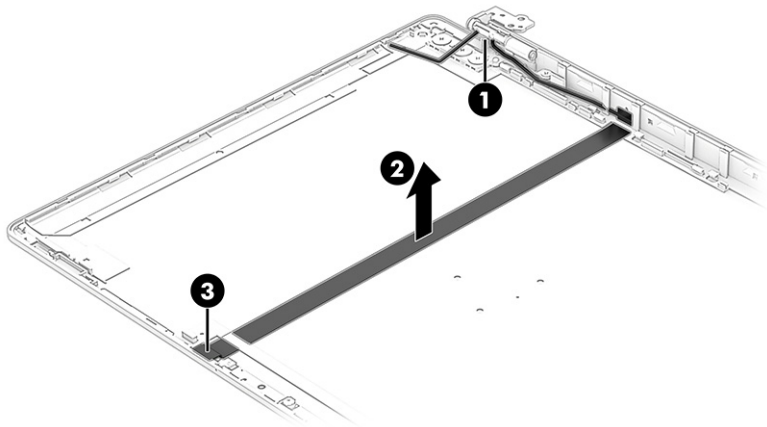

12. If you need to remove the hinges from the display rear cover:

    a. Remove the three Phillips M2.5 × 3.0 broadhead screws **(1)** from each hinge.

    b. Remove the Phillips M2.0 × 3.0 screw **(2)** from the inside of each hinge.

    c. Remove the hinges from the display back cover **(3)**.

    The display hinges are available as spare part number N10412-001.

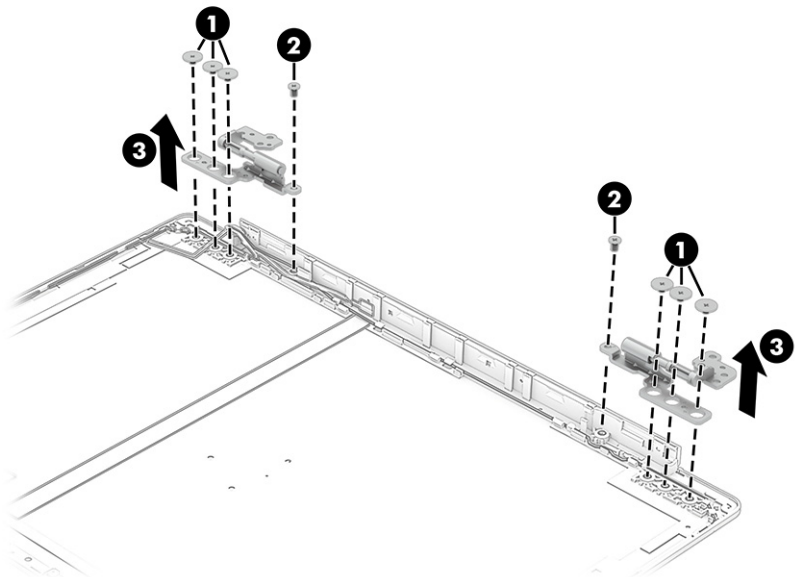

13. Release the wireless antenna cables from the retention clips and routing channels built into the sides and bottom of the display back cover **(1)**, and then peel the wireless antennas **(2)** off the display back cover.

    The wireless cables and antennas are available as spare part number N10401-001.

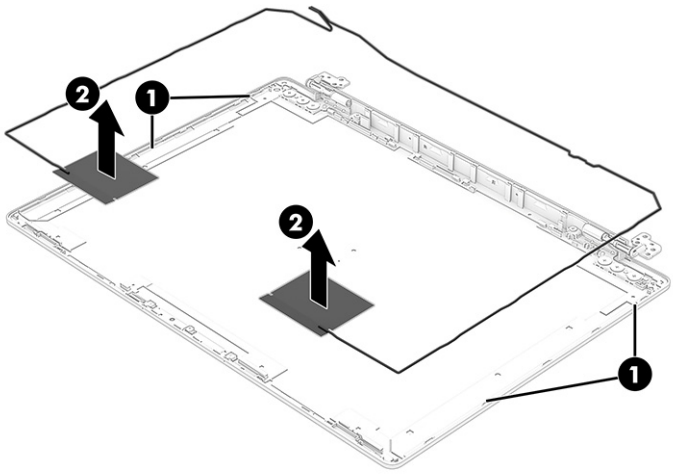

14. If you need to remove the bracket from an OLED panel:

    a. Remove tape from the panel **(1)** and from the panel connector **(2)**.

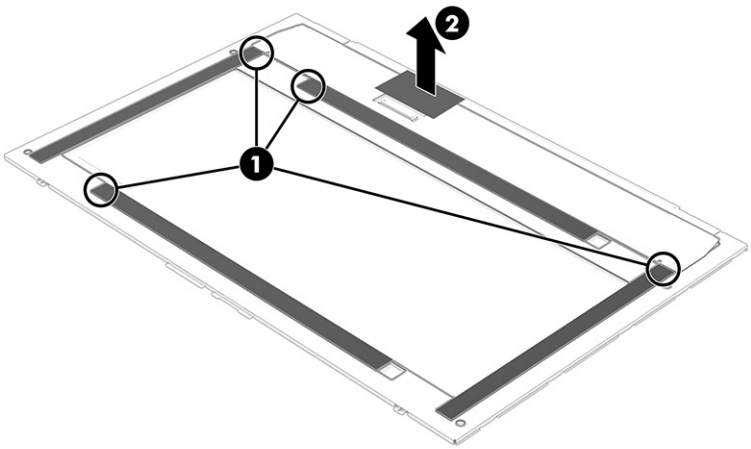

b. Pull the tape out from behind the bracket in four locations **(1)**, and the lift the bracket off the panel.

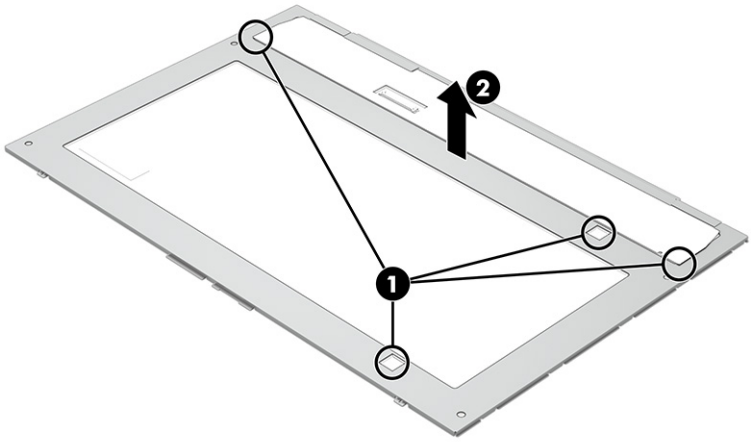

c. When installing an OLED bracket, install the adhesive strips in the locations as shown in the following illustration.

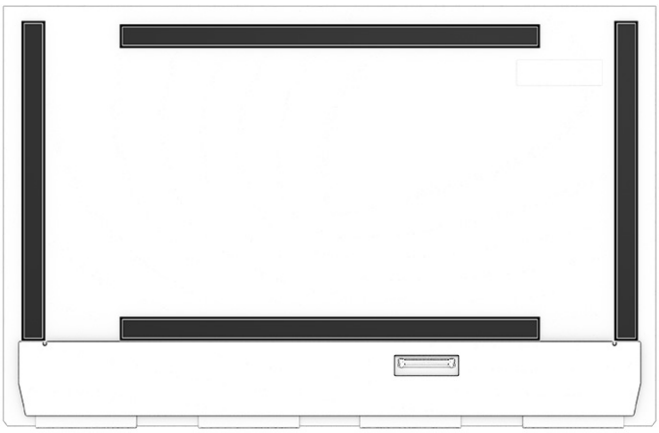

Display back covers are available as the following spare part numbers:

N10402-001: LCD panel, natural silver

N10403-001: LCD panel, warm gold

N10404-001: LCD panel, space blue

N10405-001: LCD panel, mineral silver

N10406-001: LCD panel, tranquil pink

N10407-001: OLED panel, natural silver

N10408-001: OLED panel, warm gold

N10409-001: OLED panel, space blue

N10410-001: OLED panel, mineral silver

N10411-001: OLED panel, tranquil pink

Reverse this procedure to reassemble and replace the display assembly.

Top cover with keyboard

The top cover with keyboard remains after removing all other spare parts from the computer. The first table provides the main spare part number for the top cover with keyboards. The second table provides the keyboard country codes.

Table 5-12 Top cover with keyboard descriptions and part numbers

Description	Spare part number
Top cover with keyboard for use in models without a fingerprint reader	
• Mineral silver	N10398-xx1
Top cover with keyboard for use in models with a fingerprint reader	
• Natural silver	N10393-xx1
• Natural silver, Wake On Voice (WOV) models	N10394-xx1
• Warm gold	N10395-xx1
• Warm gold, WOV models	N10396-xx1
• Space blue	N10397-xx1
• Tranquil pink	N10399-xx1
• Tranquil pink, WOV models	N10400-xx1

Table 5-13 Spare part country codes

For use in country or region	Spare part number	For use in country or region	Spare part number	For use in country or region	Spare part number
Belgium	-A41	Iceland	-DD1	Solvenia	-BA1
Brazil	-201	India	-D61	South Korea	-AD1
Bulgaria	-261	Israel	-BB1	Spain	-071
Chile	-161	Italy	-061	Switzerland	-BG1
Czech Republic/Slovakia	-FL1	Japan	-291	Taiwan	-AB1
Denmark, Finland, and Norway	-DH1	The Netherlands	-B31	Thailand	-281
French Canada	-DB1	Northern Africa	-FP1	Turkey	-141
France	-051	Portugal	-131	Ukraine	-BD1
Germany	-041	Romania	-271	United Kingdom	-031
Greece	-151	Russia	-251	United States	-001
Hungary	-211	Saudi Arabia	-171		

6 Using Setup Utility (BIOS)

Setup Utility, or Basic Input/Output System (BIOS), controls communication between all the input and output devices on the system (such as disk drives, display, keyboard, mouse, and printer). Setup Utility (BIOS) includes settings for the types of devices installed, the startup sequence of the computer, and the amount of system and extended memory.

NOTE: To start Setup Utility on convertible computers, your computer must be in notebook mode and you must use the keyboard attached to your notebook.

Starting Setup Utility (BIOS)

You have several ways to access the Setup Utility (BIOS).

IMPORTANT: Use extreme care when making changes in Setup Utility (BIOS). Errors can prevent the computer from operating properly.

- Turn on or restart the computer and quickly press f10.

  – or –

  Turn on or restart the computer, quickly press esc, and then press f10 when the Start menu is displayed.

Updating Setup Utility (BIOS)

Updated versions of Setup Utility (BIOS) might be available on the HP website. Most BIOS updates on the HP website are packaged in compressed files called *SoftPaqs*. Some download packages contain a file named Readme.txt, which contains information regarding installing and troubleshooting the file.

Determining the BIOS version

To decide whether you need to update Setup Utility (BIOS), first determine the BIOS version on your computer.

To reveal the BIOS version information (also known as *ROM date* and *System BIOS*), use one of these options.

- HP Support Assistant
  1. Select the **Search** icon in the taskbar, type `support` in the search box, and then select the **HP Support Assistant** app.

     – or –

     Select the question mark icon in the taskbar.
  2. Under **My notebook**, select **Specifications**.
- Setup Utility (BIOS)
  1. Start Setup Utility (BIOS) (see Starting Setup Utility (BIOS) on page 61).
  2. Select **Main**, and then make note of the BIOS version.

3. Select **Exit**, select one of the options, and then follow the on-screen instructions.

- In Windows, press ctrl+alt+s.

To check for later BIOS versions, see Preparing for a BIOS update on page 62.

Preparing for a BIOS update

Be sure to follow all prerequisites before downloading and installing a BIOS update.

IMPORTANT: To reduce the risk of damage to the computer or an unsuccessful installation, download and install a BIOS update only when the computer is connected to reliable external power using the AC adapter. Do not download or install a BIOS update while the computer is running on battery power, docked in an optional docking device, or connected to an optional power source. During the download and installation, follow these instructions:

- Do not disconnect power from the computer by unplugging the power cord from the AC outlet.
- Do not shut down the computer or initiate Sleep.
- Do not insert, remove, connect, or disconnect any device, cable, or cord.

NOTE: If your computer is connected to a network, consult the network administrator before installing any software updates, especially system BIOS updates.

Downloading a BIOS update

After you review the prerequisites, you can check for and download BIOS updates.

1. Select the **Search** icon in the taskbar, type `support` in the search box, and then select the **HP Support Assistant** app.

   – or –

   Select the question mark icon in the taskbar.

2. Select **Updates**. The **Checking for Updates** window opens, and Windows checks for updates.
3. Follow the on-screen instructions.
4. At the download area, follow these steps:

   a. Identify the most recent BIOS update and compare it to the BIOS version currently installed on your computer. If the update is more recent than your BIOS version, make a note of the date, name, or other identifier. You might need this information to locate the update later, after it has been downloaded to your hard drive.

   b. Follow the on-screen instructions to download your selection to the hard drive.

      Make a note of the path to the location on your hard drive where the BIOS update is downloaded. You will need to access this path when you are ready to install the update.

Installing a BIOS update

BIOS installation procedures vary. Follow any instructions that appear on the screen after the download is complete. If no instructions appear, follow these steps.

1. Select the **Search** icon in the taskbar, type `file` in the search box, and then select **File Explorer**.
2. Select your hard drive designation. The hard drive designation is typically Local Disk (C:).

3. Using the hard drive path you recorded earlier, open the folder that contains the update.
4. Double-click the file that has an .exe extension (for example, *filename*.exe).

   The BIOS installation begins.
5. Complete the installation by following the on-screen instructions.

NOTE: After a message on the screen reports a successful installation, you can delete the downloaded file from your hard drive.

7 Backing up, restoring, and recovering

You can use Windows tools or HP software to back up your information, create a restore point, reset your computer, create recovery media, or restore your computer to its factory state. Performing these standard procedures can return your computer to a working state faster.

IMPORTANT: If you will be performing recovery procedures on a tablet, the tablet battery must be at least 70% charged before you start the recovery process.

IMPORTANT: For a tablet with a detachable keyboard, connect the tablet to the keyboard base before beginning any recovery process.

Backing up information and creating recovery media

These methods of creating recovery media and backups are available on select products only.

Using Windows tools for backing up

HP recommends that you back up your information immediately after initial setup. You can do this task either using Windows Backup locally with an external USB flash drive or using online tools.

IMPORTANT: Windows is the only option that allows you to back up your personal information. Schedule regular backups to avoid information loss.

NOTE: If computer storage is 32 GB or less, Microsoft® System Restore is disabled by default.

Using the HP Cloud Recovery Download Tool to create recovery media (select products only)

You can use the HP Cloud Recovery Download Tool to create HP Recovery media on a bootable USB flash drive.

For details:

- Go to http://www.hp.com, search for HP Cloud Recovery, and then select the result that matches the type of computer that you have.

NOTE: If you cannot create recovery media yourself, contact support to obtain recovery discs. Go to http://www.hp.com/support, select your country or region, and then follow the on-screen instructions.

IMPORTANT: HP recommends that you follow the Restoring and recovery methods on page 65 to restore your computer before you obtain and use the HP recovery discs. Using a recent backup can return your machine to a working state sooner than using the HP recovery discs. After the system is restored, reinstalling all the operating system software released since your initial purchase can be a lengthy process.

Restoring and recovering your system

You have several tools available to recover your system both within and outside of Windows if the desktop cannot load.

HP recommends that you attempt to restore your system using the Restoring and recovery methods on page 65.

Creating a system restore

System Restore is available in Windows. The System Restore software can automatically or manually create restore points, or snapshots, of the system files and settings on the computer at a particular point.

When you use System Restore, it returns your computer to its state at the time you made the restore point. Your personal files and documents should not be affected.

Restoring and recovery methods

After you run the first method, test to see whether the issue still exists before you proceed to the next method, which might now be unnecessary.

1. Run a Microsoft System Restore.
2. Run Reset this PC.

   NOTE: The options **Remove everything** and then **Fully clean the drive** can take several hours to complete and leave no information on your computer. It is the safest way to reset your computer before you recycle it.

3. Recover using HP Recovery media. For more information, see Recovering using HP Recovery media on page 65.

For more information about the first two methods, see the Get Help app:

- Select the **Start** button, select **All apps**, select the **Get Help** app, and then enter the task you want to perform.

NOTE: You must be connected to the internet to access the Get Help app.

Recovering using HP Recovery media

You can use HP Recovery media to recover the operating system and drivers that were installed at the factory. On select products, it can be created on a bootable USB flash drive using the HP Cloud Recovery Download Tool.

For details, see Using the HP Cloud Recovery Download Tool to create recovery media (select products only) on page 64.

NOTE: If you cannot create recovery media yourself, contact support to obtain recovery discs. Go to http://www.hp.com/support, select your country or region, and then follow the on-screen instructions.

To recover your system:

- Insert the HP Recovery media, and then restart the computer.

NOTE: HP recommends that you follow the Restoring and recovery methods on page 65 to restore your computer before you obtain and use the HP recovery discs. Using a recent backup can return your machine to a working state sooner than using the HP recovery discs. After the system is restored, reinstalling all the operating system software released since your initial purchase can be a lengthy process.

Changing the computer boot order

If your computer does not restart using the HP Recovery media, you can change the computer boot order, the order of devices listed in BIOS for startup information. You can select an optical drive or a USB flash drive, depending on the location of your HP Recovery media.

IMPORTANT: For a tablet with a detachable keyboard, connect the tablet to the keyboard base before beginning these steps.

To change the boot order:

1. Insert the HP Recovery media.
2. Access the system **Startup** menu.
   - For computers or tablets with keyboards attached, turn on or restart the computer or tablet, quickly press esc, and then press f9 for boot options.
   - For tablets without keyboards, turn on or restart the tablet, quickly press and hold the volume up button, and then select **f9**.

     – or –

     Turn on or restart the tablet, quickly press and hold the volume down button, and then select **f9**.
3. Select the optical drive or USB flash drive from which you want to boot, and then follow the on-screen instructions.

Using HP Sure Recover (select products only)

Select computer models are configured with HP Sure Recover, a PC operating system (OS) recovery solution built into the hardware and software. HP Sure Recover can fully restore the HP OS image without installed recovery software.

Using HP Sure Recover, an administrator or user can restore the system and install:

- Latest version of the operating system
- Platform-specific device drivers
- Software applications, in the case of a custom image

To access the latest documentation for HP Sure Recover, go to http://www.hp.com/support. Follow the on-screen instructions to find your product and locate your documentation.

8 Using HP PC Hardware Diagnostics

You can use the HP PC Hardware Diagnostics utility to determine whether your computer hardware is running properly. The three versions are HP PC Hardware Diagnostics Windows, HP PC Hardware Diagnostics UEFI (Unified Extensible Firmware Interface), and (for select products only) Remote HP PC Hardware Diagnostics UEFI, a firmware feature.

Using HP PC Hardware Diagnostics Windows (select products only)

HP PC Hardware Diagnostics Windows is a Windows-based utility that allows you to run diagnostic tests to determine whether the computer hardware is functioning properly. The tool runs within the Windows operating system to diagnose hardware failures.

If HP PC Hardware Diagnostics Windows is not installed on your computer, first you must download and install it. To download HP PC Hardware Diagnostics Windows, see Downloading HP PC Hardware Diagnostics Windows on page 68.

Using an HP PC Hardware Diagnostics Windows hardware failure ID code

When HP PC Hardware Diagnostics Windows detects a failure that requires hardware replacement, a 24-digit failure ID code is generated for select component tests. For interactive tests, such as keyboard, mouse, or audio and video palette, you must perform troubleshooting steps before you can receive a failure ID.

- You have several options after you receive a failure ID:
  - Select **Next** to open the Event Automation Service (EAS) page, where you can log the case.

    – or –
  - Scan the QR code with your mobile device, which takes you to the EAS page, where you can log the case.

    – or –
  - Select the box next to the 24-digit failure ID to copy your failure code and send it to support.

Accessing HP PC Hardware Diagnostics Windows

After HP PC Hardware Diagnostics Windows is installed, you can access it from HP Support Assistant or the Start menu.

Accessing HP PC Hardware Diagnostics Windows from HP Support Assistant

After HP PC Hardware Diagnostics Windows is installed, follow these steps to access it from HP Support Assistant.

1. Select the **Search** icon in the taskbar, type `support` in the search box, and then select the **HP Support Assistant** app.

   – or –

   Select the question mark icon in the taskbar.

2. Select **Fixes & Diagnostics**.
3. Select **Run hardware diagnostics**, and then select **Launch**.
4. When the tool opens, select the type of diagnostic test that you want to run, and then follow the on-screen instructions.

NOTE: To stop a diagnostic test, select **Cancel**.

Accessing HP PC Hardware Diagnostics Windows from the Start menu (select products only)

After HP PC Hardware Diagnostics Windows is installed, follow these steps to access it from the Start menu.

1. Select the **Start** button, and then select **All apps**.
2. Select **HP PC Hardware Diagnostics Windows**.
3. When the tool opens, select the type of diagnostic test that you want to run, and then follow the on-screen instructions.

NOTE: To stop a diagnostic test, select **Cancel**.

Downloading HP PC Hardware Diagnostics Windows

The HP PC Hardware Diagnostics Windows downloading instructions are provided in English only. You must use a Windows computer to download this tool because only .exe files are provided.

Downloading the latest HP PC Hardware Diagnostics Windows version from HP

To download HP PC Hardware Diagnostics Windows from HP, follow these steps.

1. Go to http://www.hp.com/go/techcenter/pcdiags. The HP PC Diagnostics home page is displayed.
2. Select **Download HP Diagnostics Windows**, and then select the specific Windows diagnostics version to download to your computer or a USB flash drive.

The tool downloads to the selected location.

Downloading the HP PC Hardware Diagnostics Windows from the Microsoft Store

You can download the HP PC Hardware Diagnostics Windows from the Microsoft Store.

1. Select the Microsoft Store app on your desktop or select the **Search** icon in the taskbar, and then type `Microsoft Store` in the search box.
2. Type `HP PC Hardware Diagnostics Windows` in the **Microsoft Store** search box.
3. Follow the on-screen directions.

The tool downloads to the selected location.

Downloading HP Hardware Diagnostics Windows by product name or number (select products only)

You can download HP PC Hardware Diagnostics Windows by product name or number.

NOTE: For some products, you might have to download the software to a USB flash drive by using the product name or number.

1. Go to http://www.hp.com/support.
2. Select **Software and Drivers**, select your type of product, and then enter the product name or number in the search box that is displayed.
3. In the **Diagnostics** section, select **Download**, and then follow the on-screen instructions to select the specific Windows diagnostics version to be downloaded to your computer or USB flash drive.

The tool downloads to the selected location.

Installing HP PC Hardware Diagnostics Windows

To install HP PC Hardware Diagnostics Windows, navigate to the folder on your computer or the USB flash drive where the .exe file downloaded, double-click the .exe file, and then follow the on-screen instructions.

Using HP PC Hardware Diagnostics UEFI

HP PC Hardware Diagnostics UEFI (Unified Extensible Firmware Interface) allows you to run diagnostic tests to determine whether the computer hardware is functioning properly. The tool runs outside the operating system so that it can isolate hardware failures from issues that are caused by the operating system or other software components.

NOTE: For some products, you must use a Windows computer and a USB flash drive to download and create the HP UEFI support environment because only .exe files are provided. For more information, see Downloading HP PC Hardware Diagnostics UEFI to a USB flash drive on page 70.

If your PC does not start in Windows, you can use HP PC Hardware Diagnostics UEFI to diagnose hardware issues.

Using an HP PC Hardware Diagnostics UEFI hardware failure ID code

When HP PC Hardware Diagnostics UEFI detects a failure that requires hardware replacement, a 24-digit failure ID code is generated.

For assistance in solving the problem:

- Select **Contact HP**, accept the HP privacy disclaimer, and then use a mobile device to scan the failure ID code that appears on the next screen. The HP Customer Support - Service Center page appears with your failure ID and product number automatically filled in. Follow the on-screen instructions.

  – or –

  Contact support, and provide the failure ID code.

NOTE: To start diagnostics on a convertible computer, your computer must be in notebook mode, and you must use the attached keyboard.

NOTE: If you need to stop a diagnostic test, press esc.

Starting HP PC Hardware Diagnostics UEFI

To start HP PC Hardware Diagnostics UEFI, follow this procedure.

1. Turn on or restart the computer, and quickly press esc.

2. Press f2.

   The BIOS searches three places for the diagnostic tools, in the following order:

   a. Connected USB flash drive

   NOTE: To download the HP PC Hardware Diagnostics UEFI tool to a USB flash drive, see Downloading the latest HP PC Hardware Diagnostics UEFI version on page 70.

   b. Hard drive

   c. BIOS

3. When the diagnostic tool opens, select the type of diagnostic test that you want to run, and then follow the on-screen instructions.

Downloading HP PC Hardware Diagnostics UEFI to a USB flash drive

Downloading HP PC Hardware Diagnostics UEFI to a USB flash drive can be useful in some situations.

- HP PC Hardware Diagnostics UEFI is not included in the preinstallation image.
- HP PC Hardware Diagnostics UEFI is not included in the HP Tool partition.
- The hard drive is damaged.

NOTE: The HP PC Hardware Diagnostics UEFI downloading instructions are provided in English only, and you must use a Windows computer to download and create the HP UEFI support environment because only .exe files are provided.

Downloading the latest HP PC Hardware Diagnostics UEFI version

To download the latest HP PC Hardware Diagnostics UEFI version to a USB flash drive, follow this procedure.

1. Go to http://www.hp.com/go/techcenter/pcdiags. The HP PC Diagnostics home page is displayed.
2. Select **Download HP Diagnostics UEFI**, and then select **Run**.

Downloading HP PC Hardware Diagnostics UEFI by product name or number (select products only)

You can download HP PC Hardware Diagnostics UEFI by product name or number (select products only) to a USB flash drive.

NOTE: For some products, you might have to download the software to a USB flash drive by using the product name or number.

1. Go to http://www.hp.com/support.
2. Enter the product name or number, select your computer, and then select your operating system.
3. In the **Diagnostics** section, follow the on-screen instructions to select and download the specific UEFI Diagnostics version for your computer.

Using Remote HP PC Hardware Diagnostics UEFI settings (select products only)

Remote HP PC Hardware Diagnostics UEFI is a firmware (BIOS) feature that downloads HP PC Hardware Diagnostics UEFI to your computer. It can then execute the diagnostics on your computer, and it might upload results to a preconfigured server.

For more information about Remote HP PC Hardware Diagnostics UEFI, go to http://www.hp.com/go/techcenter/pcdiags, and then select **Find out more**.

Downloading Remote HP PC Hardware Diagnostics UEFI

HP Remote PC Hardware Diagnostics UEFI is also available as a SoftPaq that you can download to a server.

Downloading the latest Remote HP PC Hardware Diagnostics UEFI version

You can download the latest HP PC Hardware Diagnostics UEFI version to a USB flash drive.

1. Go to http://www.hp.com/go/techcenter/pcdiags. The HP PC Diagnostics home page is displayed.
2. Select **Download Remote Diagnostics**, and then select **Run**.

Downloading Remote HP PC Hardware Diagnostics UEFI by product name or number

You can download HP Remote PC Hardware Diagnostics UEFI by product name or number.

NOTE: For some products, you might have to download the software by using the product name or number.

1. Go to http://www.hp.com/support.
2. Select **Software and Drivers**, select your type of product, enter the product name or number in the search box that is displayed, select your computer, and then select your operating system.
3. In the **Diagnostics** section, follow the on-screen instructions to select and download the **Remote UEFI** version for the product.

Customizing Remote HP PC Hardware Diagnostics UEFI settings

Using the Remote HP PC Hardware Diagnostics setting in Computer Setup (BIOS), you can perform several customizations.

- Set a schedule for running diagnostics unattended. You can also start diagnostics immediately in interactive mode by selecting **Execute Remote HP PC Hardware Diagnostics**.
- Set the location for downloading the diagnostic tools. This feature provides access to the tools from the HP website or from a server that has been preconfigured for use. Your computer does not require the traditional local storage (such as a hard drive or USB flash drive) to run remote diagnostics.
- Set a location for storing the test results. You can also set the user name and password that you use for uploads.
- Display status information about the diagnostics run previously.

To customize Remote HP PC Hardware Diagnostics UEFI settings, follow these steps:

1. Turn on or restart the computer, and when the HP logo appears, press f10 to enter Computer Setup.

2. Select **Advanced**, and then select **Settings**.
3. Make your customization selections.
4. Select **Exit**, then select **Save Changes and Exit** to save your settings.

Your changes take effect when the computer restarts.

9 Specifications

This chapter provides specifications for your computer system.

Computer specifications

This section provides specifications for your computer. When traveling with your computer, the computer dimensions and weights, as well as input power ratings and operating specifications, provide helpful information.

Table 9-1 **Computer specifications**

	Metric	U.S.
Dimensions		
Width	**313.5 mm**	12.34 in
Depth	**224.2 mm**	8.83 in
Height (rear)	**18.4 mm**	0.72 in
Height (front)	**16.5 mm**	0.65 in
Weight	**1400 g**	3.09 lb
Input power		
Operating voltage and current	19.5 V dc @ 3.33 A – 65 W 19.5 V dc @ 2.31 A – 45 W	
Temperature		
Operating	**5°C to 35°C**	41°F to 95°F
Nonoperating	**–20°C to 60°C**	–4°F to 140°F
Relative humidity (noncondensing)		
Operating	10% to 90%	
Nonoperating	5% to 95%	
Maximum altitude (unpressurized)		
Operating	**–15 m to 3,048 m**	–50 ft to 10,000 ft
Nonoperating	**–15 m to 12,192 m**	–50 ft to 40,000 ft

NOTE: Applicable product safety standards specify thermal limits for plastic surfaces. The device operates well within this range of temperatures.

35.6 cm (14.0 in) display specifications

This section provides specifications for your display.

Table 9-2 Display specifications

	Metric	U.S.
Active diagonal size	**35.6 cm**	14.0 in
Resolution	2240 × 1440 (2.2K) 2880 × 1800 (2.8K)	
Surface treatment	Antiglare (2.2K) BrightView (2.8K)	
Brightness	400 nits (2.8K) 300 nits (2.2K)	
Viewing angle	UWVA	
Backlight	OLED (2.8K) LCD (2.2K)	
Display panel interface	eDP	

Solid-state drive specifications

This section provides specifications for your solid-state drives.

Table 9-3 Solid-state drive specifications

	256 GB*	512 GB*	1 TB*
Dimensions			
Height	1.0 mm	1.0 mm	1.0 mm
Length	50.8 mm	50.8 mm	50.8 mm
Width	28.9 mm	28.9 mm	28.9 mm
Weight	< 10 g	< 10 g	< 10 g
Interface type	PCIe	PCIe	PCIe
Ready time, maximum (to not busy)	1.0 ms	< 1.0 ms	1.0 ms
Access times, logical	0.1 ms	0.1 ms	0.1 ms
Transfer rate			
Sequential read	up to 2150 MB/s	up to 2150 MB/s	up to 2150 MB/s
Random read	Up to 300,000 IOPs	Up to 300,000 IOPs	Up to 300,000 IOPs
Sequential write	up to 1550 MB/s	up to 1550 MB/s	up to 1550 MB/s
Random write	Up to 100,000 IOPs	Up to 100,000 IOPs	Up to 100,000 IOPs
Total logical sectors	468,883,296	1,000,215,216	1,500,336,388
Operating temperature	**0°C to 70°C** (32°F to 158°F)		

*1 GB = 1 billion bytes when referring to hard drive storage capacity. Actual accessible capacity is less.
Actual drive specifications might differ slightly.

Table 9-3 Solid-state drive specifications (continued)

	256 GB*	512 GB*	1 TB*
NOTE: Certain restrictions and exclusions apply. Contact support for details.			

10 Power cord set requirements

This chapter provides power cord requirements for countries and regions.

The wide-range input feature of the computer permits it to operate from any line voltage from 100 V ac to 120 V ac, or from 220 V ac to 240 V ac.

The three-conductor power cord set included with the computer meets the requirements for use in the country or region where the equipment is purchased.

Power cord sets for use in other countries or regions must meet the requirements of the country and region where the computer is used.

Requirements for all countries

These power cord requirements are applicable to all countries and regions.

- The length of the power cord set must be at least **1.0 m** (3.3 ft) and no more than **2.0 m** (6.5 ft).
- All power cord sets must be approved by an acceptable accredited agency responsible for evaluation in the country or region where the power cord set will be used.
- The power cord sets must have a minimum current capacity of 10 A and a nominal voltage rating of 125 V ac or 250 V ac, as required by the power system of each country or region.
- The appliance coupler must meet the mechanical configuration of an EN 60 320/IEC 320 Standard Sheet C13 connector for mating with the appliance inlet on the back of the computer.

Requirements for specific countries and regions

To determine power cord requirements for specific countries and regions, use this table.

Table 10-1 **Power cord requirements for specific countries and regions**

Country/region	Accredited agency	Applicable note number
Argentina	IRAM	1
Australia	SAA	1
Austria	OVE	1
Belgium	CEBEC	1
Brazil	ABNT	1
Canada	CSA	2
Chile	IMQ	1
Denmark	DEMKO	1
Finland	FIMKO	1
France	UTE	1
Germany	VDE	1

Table 10-1 Power cord requirements for specific countries and regions (continued)

Country/region	Accredited agency	Applicable note number
India	BIS	1
Israel	SII	1
Italy	IMQ	1
Japan	JIS	3
Netherlands	KEMA	1
New Zealand	SANZ	1
Norway	NEMKO	1
People's Republic of China	CCC	4
Saudi Arabia	SASO	7
Singapore	PSB	1
South Africa	SABS	1
South Korea	KTL	5
Sweden	SEMKO	1
Switzerland	SEV	1
Taiwan	BSMI	6
Thailand	TISI	1
United Kingdom	ASTA	1
United States	UL	2

1. The flexible cord must be Type H05VV-F, three-conductor, 0.75 mm^2 conductor size. Power cord set fittings (appliance coupler and wall plug) must bear the certification mark of the agency responsible for evaluation in the country or region where it will be used.
2. The flexible cord must be Type SVT/SJT or equivalent, No. 18 AWG, three-conductor. The wall plug must be a two-pole grounding type with a NEMA 5-15P (15 A, 125 V ac) or NEMA 6-15P (15 A, 250 V ac) configuration. CSA or C-UL mark. UL file number must be on each element.
3. The appliance coupler, flexible cord, and wall plug must bear a T mark and registration number in accordance with the Japanese Dentori Law. The flexible cord must be Type VCTF, three-conductor, 0.75 mm^2 or 1.25 mm^2 conductor size. The wall plug must be a two-pole grounding type with a Japanese Industrial Standard C8303 (7 A, 125 V ac) configuration.
4. The flexible cord must be Type RVV, three-conductor, 0.75 mm^2 conductor size. Power cord set fittings (appliance coupler and wall plug) must bear the CCC certification mark.
5. The flexible cord must be Type H05VV-F three-conductor, 0.75 mm^2 conductor size. KTL logo and individual approval number must be on each element. Approval number and logo must be printed on a flag label.
6. The flexible cord must be Type HVCTF three-conductor, 1.25 mm^2 conductor size. Power cord set fittings (appliance coupler, cable, and wall plug) must bear the BSMI certification mark.
7. For 127 V ac, the flexible cord must be Type SVT or SJT 3-conductor, 18 AWG, with plug NEMA 5-15P (15 A, 125 V ac), with UL and CSA or C-UL marks. For 240 V ac, the flexible cord must be Type H05VV-F three-conductor, 0.75 mm^2 or 1.00 mm^2 conductor size, with plug BS 1363/A with BSI or ASTA marks.

11 Recycling

When a nonrechargeable or rechargeable battery has reached the end of its useful life, do not dispose of the battery in general household waste. Follow the local laws and regulations in your area for battery disposal.

HP encourages customers to recycle used electronic hardware, HP original print cartridges, and rechargeable batteries. For more information about recycling programs, see the HP website at http://www.hp.com/recycle.

Index

A

AC adapter and battery light, identifying 5
AC adapters, spare part numbers 22
action key, identifying 13
audio-out (headphone)/audio-in (microphone) combo jack, identifying 6
audio, product description 2

B

backup, creating 64
backups 64
battery
  illustrated 19
  spare part number 19
BIOS
  determining version 61
  downloading an update 62
  starting the Setup Utility 61
  updating 61
Bluetooth label 14
boot order, changing 66
bottom components 14
bottom cover
  illustrated 20
  removal 34
  spare part number 20, 34
buttons
  left touchpad 9
  power 12, 13
  right touchpad 9

C

camera
  identifying 8
  illustrated 21
  spare part number 21
camera light, identifying 8
caps lock light 10
caring for your computer 29
cautions
  electrostatic discharge 25, 26
cleaning your computer 29
  caring for wood veneer 31
  disinfecting 30
  HP Easy Clean 29
  removing dirt and debris 29
components
  bottom 14
  display 7
  keyboard area 8
  left side 6
  lights 10
  rear 13
  right side 5
  touchpad 9
computer major components 17
computer specifications 73
connectors
  power 5
control zone 9

D

display
  specifications 73
display assembly
  subcomponents 20
display back cover
  illustrated 22
  spare part number 22
display bezel
  illustrated 21
  spare part number 21
display cable
  illustrated 22
  spare part number 22
display components 7
display panel
  illustrated 22
  product description 1
  spare part number 22

E

electrostatic discharge (ESD) 25, 26
  preventing damage 25-27
esc key, identifying 13

F

fan
  illustrated 19
  removal 46
  spare part number 19, 46
fingerprint reader 12
  illustrated 19
  removal 45
  spare part number 19
  spare part numbers 45
fn key, identifying 13

G

graphics, product description 1
grounding methods 25-27
guidelines
  packaging 25, 31
  transporting 25, 31
  workstation 25

H

hard drive
  product description 2
  specifications 73
HDMI port
  identifying 5
heat sink
  illustrated 19
  removal 47
  spare part number 19
  spare part numbers 47
hinge
  illustrated 22
  spare part number 22
HP PC Hardware Diagnostics UEFI
  downloading 70
  failure ID code 69
  starting 69
  using 69
HP PC Hardware Diagnostics Windows
  accessing 67, 68
  downloading 68
  failure ID code 67
  installing 69
  using 67
HP Recovery media recovery 65
HP Sure Recover 66

I

illustrated parts catalog 17
internal microphones, identifying 8, 13

J

jacks
- audio-out (headphone)/audio-in (microphone) 6

K

keyboard
- product description 3

keyboard country codes 60
keys
- action 13
- esc 13
- fn 13
- Windows 13

L

labels
- Bluetooth 14
- regulatory 14
- serial number 14
- service 14
- wireless certification 14
- WLAN 14

left control zone, identifying 9, 10
left side components 6
lights
- AC adapter and battery 5
- camera 8
- caps lock 10
- mute 10
- power 10
- touchpad 9

low blue light mode 7

M

media card reader, product description 2
memory module
- product description 1

microphone
- product description 2

model name 1
mute light, identifying 10

O

operating system, product description 4

P

packaging guidelines 25, 31
pointing device, product description 3
ports
- HDMI 5
- product description 2
- USB SuperSpeed 5 Gbps 6
- USB Type-C power connector and SuperSpeed 10 Gbps port with DisplayPort output 5

power button, identifying 12, 13
power connector
- identifying 5

power cord
- requirements for all countries 76
- requirements for specific countries and regions 76
- set requirements 76

power cords, spare part numbers 22
power light, identifying 10
power requirements, product description 3
primary storage
- product description 2

processor
- product description 1

product description
- audio 2
- display panel 1
- graphics 1
- hard drive 2
- keyboard 3
- media card reader 2
- memory module 1
- microphone 2
- operating system 4
- pointing device 3
- ports 2
- power requirements 3
- primary storage 2
- processors 1
- product name 1
- security 3
- serviceability 4
- solid-state drive 2
- video 2
- wireless 2

product name 1
product name and number, computer 14

R

recovery 64
- discs 65
- media 65
- USB flash drive 65

recovery media 64
- creating using HP Cloud Recovery Download Tool 64
- creating using Windows tools 64

regulatory information
- regulatory label 14
- wireless certification labels 14

Remote HP PC Hardware Diagnostics UEFI settings
- customizing 71
- using 71

removal and replacement
- procedures 34
- solid-state drive 41

restoring 64
restoring and recovery methods 65
right control zone, identifying 9, 10
right side components 5

S

Screw Kit, spare part number 22
security, product description 3
serial number, computer 14
service labels, locating 14
serviceability, product description 4
slots
- memory card reader 7
- microSD memory card reader 7

solid-state drive
- illustrated 19
- product description 2
- removal and replacement 41
- spare part number 19
- specifications 74

speaker
- illustrated 18
- removal 43
- spare part number 18
- spare part numbers 43

special keys
- identifying 12
- using 12

specifications
- computer 73
- display 73
- hard drive 73

solid-state drive 74
static electricity 25, 26
support information 31
system board
illustrated 18
removal 49
spare part number 18
spare part numbers 49
system restore 65
system restore point, creating 64

T

top cover with keyboard
spare part numbers 60
top cover/keyboard
illustrated 18
spare part number 18
touchpad
illustrated 18
removal 37
settings 9
spare part number 18
spare part numbers 37
touchpad buttons
identifying 9
touchpad components 9
touchpad light, identifying 9
touchpad settings, adjusting 9
touchpad zone, identifying 9, 10
transporting guidelines 25, 31
traveling with the computer 14

U

USB SuperSpeed 5 Gbps port, identifying 6
USB Type-C power connector and SuperSpeed 10 Gbps port with DisplayPort output, identifying 5
USB/audio board
illustrated 20
removal 44
spare part number 20
spare part numbers 44

V

vent, identifying 14
vents, identifying 13
video, product description 2

W

wake-on-voice 7
Windows
backup 64
recovery media 64
system restore point 64
Windows key, identifying 13
Windows tools, using 64
wireless antennas
illustrated 22
spare part number 22
wireless antennas, identifying 8
wireless certification label 14
wireless, product description 2
WLAN antennas, identifying 8
WLAN device 14
WLAN label 14
WLAN module
removal 40
spare part numbers 40
workstation guidelines 25