Maintenance and Service Guide

SUMMARY

This guide provides information about spare parts, removal and replacement of parts, security, backing up, and more.

Legal information

© Copyright 2022 HP Development Company, L.P.

AMD is a trademark of Advanced Micro Devices, Inc. Bluetooth is a trademark owned by its proprietor and used by HP Inc. under license. Intel, Core, and Iris are trademarks of Intel Corporation or its subsidiaries in the U.S. and/or other countries. Microsoft and Windows are either registered trademarks or trademarks of Microsoft Corporation in the United States and/or other countries. NVIDIA, GeForce, and Optimus are trademarks and/or registered trademarks of NVIDIA Corporation in the U.S. and other countries. Qualcomm is a trademark of Qualcomm Incorporated, registered in the United States and other countries, used with permission. SDHC, SDXC, and microSD are trademarks or registered trademarks of SD-3C LLC. USB Type-C and USB-C are registered trademarks of USB Implementers Forum. Miracast and Wi-Fi are registered trademarks of Wi-Fi Alliance.

The information contained herein is subject to change without notice. The only warranties for HP products and services are set forth in the express warranty statements accompanying such products and services. Nothing herein should be construed as constituting an additional warranty. HP shall not be liable for technical or editorial errors or omissions contained herein.

First Edition: April 2022

Document Part Number: N06379-001

Product notice

This guide describes features that are common to most models. Some features may not be available on your computer.

Not all features are available in all editions or versions of Windows. Systems may require upgraded and/or separately purchased hardware, drivers, software or BIOS update to take full advantage of Windows functionality. Windows is automatically updated, which is always enabled. High-speed internet and Microsoft account required. ISP fees may apply and additional requirements may apply over time for updates. See http://www.windows.com. **If your product ships with Windows in S Mode:** Windows in S Mode works exclusively with apps from the Microsoft Store within Windows. Certain default settings, features, and apps cannot be changed. Some accessories and apps that are compatible with Windows may not work (including some antivirus, PDF writers, driver utilities, and accessibility apps), and performance may vary, even if you switch out of S Mode. If you switch to Windows, you cannot switch back to S Mode. Learn more at Windows.com/SmodeFAQ.

To access the latest user guides, go to http://www.hp.com/support, and follow the instructions to find your product. Then select **Manuals**.

Software terms

By installing, copying, downloading, or otherwise using any software product preinstalled on this computer, you agree to be bound by the terms of the HP End User License Agreement (EULA). If you do not accept these license terms, your sole remedy is to return the entire unused product (hardware and software) within 14 days for a full refund subject to the refund policy of your seller.

For any further information or to request a full refund of the price of the computer, please contact your seller.

Safety warning notice

Reduce the possibility of heat-related injuries or of overheating the computer by following the practices described.

⚠ **WARNING!** To reduce the possibility of heat-related injuries or of overheating the computer, do not place the computer directly on your lap or obstruct the computer air vents. Use the computer only on a hard, flat surface. Do not allow another hard surface, such as an adjoining optional printer, or a soft surface, such as pillows or rugs or clothing, to block airflow. Also, do not allow the AC adapter to come into contact with the skin or a soft surface, such as pillows or rugs or clothing, during operation. The computer and the AC adapter comply with the user-accessible surface temperature limits defined by applicable safety standards.

Table of contents

1 Product description 1

2 Getting to know your computer 5

Right side 5

Left side 6

Display 7

Low blue light mode (select products only) 7

Keyboard area 8

Touchpad settings and components 9

Touchpad settings 9

Adjusting touchpad settings 9

Turning on the touchpad 9

Touchpad components 9

Lights 10

Button 11

Special keys 12

Bottom 13

Rear 14

Labels 15

3 Illustrated parts catalog 17

Computer major components 17

Display assembly subcomponents 20

Miscellaneous parts 21

4 Removal and replacement procedures preliminary requirements 23

Tools required 23

Service considerations 23

Plastic parts 23

Cables and connectors 23

Drive handling 23

Electrostatic discharge information 24

Generating static electricity 24

Preventing electrostatic damage to equipment 25

Personal grounding methods and equipment 25

Grounding the work area 26

Recommended materials and equipment 26

Cleaning your computer 27

Enabling HP Easy Clean (select products only) 27

Removing dirt and debris from your computer 27

Cleaning your computer with a disinfectant 28
Caring for wood veneer (select products only) 29
Packaging and transporting guidelines 29
Accessing support information 29
5 Removal and replacement procedures for Customer Self-Repair parts 32
Component replacement procedures 32
Preparation for disassembly 32
Solid-state drive 32
Memory modules 33
6 Removal and replacement procedures for authorized service provider parts 36
Component replacement procedures 36
Preparation for disassembly 36
Bottom cover 36
Battery 38
Display subcomponents (without removing the display) 39
WLAN module 42
Speakers 44
Fan assembly 45
Power connector cable 46
I/O board 47
Card reader 48
Heat sink 49
System board 50
Touchpad 53
Plastic rear vent and fin 55
Display assembly 56
Top cover with keyboard 62
7 Using Setup Utility (BIOS) 64
Starting Setup Utility (BIOS) 64
Updating Setup Utility (BIOS) 64
Determining the BIOS version 64
Preparing for a BIOS update 65
Downloading a BIOS update 65
Installing a BIOS update 65
8 Backing up, restoring, and recovering 67
Backing up information and creating recovery media 67
Using Windows tools for backing up 67
Using the HP Cloud Recovery Download Tool to create recovery media (select products only) 67
Restoring and recovering your system 67
Creating a system restore 68
Restoring and recovery methods 68
Recovering using HP Recovery media 68
Changing the computer boot order 69
Using HP Sure Recover (select products only) 69

9 Using HP PC Hardware Diagnostics 70
Using HP PC Hardware Diagnostics Windows (select products only) 70
Using an HP PC Hardware Diagnostics Windows hardware failure ID code 70
Accessing HP PC Hardware Diagnostics Windows 70
Accessing HP PC Hardware Diagnostics Windows from HP Support Assistant 70
Accessing HP PC Hardware Diagnostics Windows from the Start menu (select products only) 71
Downloading HP PC Hardware Diagnostics Windows 71
Downloading the latest HP PC Hardware Diagnostics Windows version from HP 71
Downloading the HP PC Hardware Diagnostics Windows from the Microsoft Store 71
Downloading HP Hardware Diagnostics Windows by product name or number (select products only) 71
Installing HP PC Hardware Diagnostics Windows 72
Using HP PC Hardware Diagnostics UEFI 72
Using an HP PC Hardware Diagnostics UEFI hardware failure ID code 72
Starting HP PC Hardware Diagnostics UEFI 72
Downloading HP PC Hardware Diagnostics UEFI to a USB flash drive 73
Downloading the latest HP PC Hardware Diagnostics UEFI version 73
Downloading HP PC Hardware Diagnostics UEFI by product name or number (select products only) 73
Using Remote HP PC Hardware Diagnostics UEFI settings (select products only) 74
Downloading Remote HP PC Hardware Diagnostics UEFI 74
Downloading the latest Remote HP PC Hardware Diagnostics UEFI version 74
Downloading Remote HP PC Hardware Diagnostics UEFI by product name or number 74
Customizing Remote HP PC Hardware Diagnostics UEFI settings 74
10 Specifications 76
Computer specifications 76
Display specifications 76
Solid-state drive specifications 77
11 Power cord set requirements 78
Requirements for all countries 78
Requirements for specific countries and regions 78
12 Recycling 80
Index 81

1 Product description

This table provides detailed product information.

Table 1-1 Product components and their descriptions

Category	Description
Product Name	**Victus by HP Gaming Laptop**
	Model numbers: 15-fa0*xxx*
	CTO model number: 15t-fa0*xxx*
Processor	**12th generation Intel® processors**
	Intel Core™ i7-12700H (2.3 GHz [turbo up to 4.7 GHz], 14 cores, 24 MB L3 cache, 45 W)
	Intel Core i7-12650H (2.7 GHz [turbo up to 4.7 GHz], 10 cores, 24 MB L3 cache, 45 W)
	Intel Core i5-12500H (2.5 GHz [turbo up to 4.5 GHz], 12 cores, 18 MB L3 cache, 45 W)
	Intel Core i5-12450H (2.0 GHz [turbo up to 4.4 GHz], 8 cores, 12 MB L3 cache, 45 W)
Graphics controller	**Integrated graphics**
	Intel Iris® Xe
	Hybrid graphics
	• NVIDIA® GeForce® RTX 3050 graphics
	• NVIDIA GeForce RTX 3050Ti graphics
	• NVIDIA GeForce GTX 1650 graphics
	Supports HD decode, DX12, and HDMI
	Supports Optimus®
	Supports GPS (GPU Performance Scaling)
	MR compatible (60 Hz frame rate)
Display	**39.6 cm (15.6 in), liquid crystal display (LCD), white light-emitting diode (WLED), antiglare flat, flicker free**
	Full high definition (FHD) (1920 × 1080), standard viewing angle (SVA), 45% NTSC, embedded DisplayPort (eDP) 1.2 without panel self-refresh (PSR), 250 nits
	FHD, ultrawide viewing angle (UWVA), 45% NTSC, eDP 1.2 without PSR, 250 nits
	FHD, UWVA, eDP 1.3 + PSR, 45% NTSC, 250 nits, 144 Hz
	FHD, UWVA, 100% sRGB, eDP 1.4 + PSR2, low blue light, 300 nits

Table 1-1 **Product components and their descriptions (continued)**

Category	Description
Memory	Two memory slots supporting up to 16 GB of RAM
	DDR4-3200
	Supports the following configurations:
	• 16 GB (8 GB × 2)
	• 12 GB (8 GB + 4 GB)
	• 8 GB (8 GB × 1 or 4 GB × 2)
Primary storage	**M.2 solid-state drive (PCIe-4 × 4, 2280, non-volatile memory express (NVMe), three-layer cell (TLC)**
	1 TB
	512 GB
	256 GB
Audio	Audio brand: Bang & Olufsen
	Audio control panel: myHP Audio Control
	Dual speakers
	Supports HP Audio Boost
Video	HP Wide Vision HD camera - indicator LED, USB 2.0, HD BSI sensor, f2.0, 88° wide field-of-view (WFOV)
	Dual-array, digital microphone with appropriate software
Wireless networking	**Wireless Local Area Network (WLAN) with dual antennas**
	• MediaTek™ Wi-Fi® 6 MT7921 + Bluetooth® 5.2 (802.11ax 2 × 2, MU-MIMO supported, supporting gigabit data rate)
	• Intel Wi-Fi 6E AX211 + Bluetooth 5.2 (802.11ax 2 × 2, MU-MIMO, supporting gigabit data rate)
	Support for Miracast®
	Support for Modern Standby (connected)
RJ-45 (network)	Integrated 10/100/1000 NIC

Table 1-1 Product components and their descriptions (continued)

Category	Description
Ports	Hot plug/unplug and auto detect for correct output to wide-aspect vs standard aspect video
	Audio-out (headphone)/audio-in (microphone) combo jack
	RJ-45 (network) jack
	HDMI 2.1 out - output up to 8 K @ 60 Hz with HDCP 2.3 (3050 Ti/3050) - output up to 4 K @ 60 Hz with HDCP 2.2 (1650)
	AC Smart pin adapter plug
	(2) USB 3.2 Gen 1 Type-A port; supports HP Sleep & Charge
	USB 3.2 Type-C Gen1 port, supports: - Display Port 1.4 out up to 5 K (60 Hz) - Data transfer - HDMI 2.1 output up to 5 K @ 60 Hz with HDCP 2.3 - HP Sleep & Charge
Media card reader	**HP Multi-Format Digital Media Card Reader**
	Supports microSD™/SDHC™/SDXC™
	Push-push insertion/removal
Keyboard/pointing devices	**Keyboard**
	Full size, island style, backlit keyboard with numeric keypad
	Clickpad with image sensor
	Multitouch gestures enabled
	Precision touchpad supported
	Supports modern trackpad gestures
	Taps enabled as default
Power requirements	**Battery**
	4 cell, 70 Whr
	3 cell, 52.5 Whr
	Long life
	Fast charge
	HP Smart AC adapter (4.5 mm, power correction factor [PFC])
	200 W, slim, right angle, 3 pin
	150 W, slim barrel
	Power cord
	C13, premium, 1.0 m (3.3 ft)
	C5, conventional, 1.0 m (3.3 ft)

Table 1-1 Product components and their descriptions (continued)

Category	Description
Security	Trusted Platform Module (TPM) 2.0
Operating system	Windows® 11 Home 64
	Windows 11 Home 64 Advanced
	Windows 11 Home 64 Advanced Single Language
	Windows 11 Home 64 Chinese Market CPPP
	Windows 11 Home 64 High-End Chinese Market CPPP
	Windows 11 Home 64 Plus
	Windows 11 Home 64 Plus Single Language
	Windows 11 Home 64 Plus Single Language Africa Market PPP
	Windows 11 Home 64 Plus Single Language APAC EM PPP
	Windows 11 Home 64 Plus Single Language India Market PPP
	Windows 11 Home 64 Plus Single Language Indonesia Market PPP
	Windows 11 Home Single Language
	Windows 11 Home 64 Single Language Africa Market PPP
	Windows 11 Home 64 Single Language APAC EM PPP
	Windows 11 Home 64 Single Language India Market PPP
	Windows 11 Home 64 Single Language Indonesia Market PPP
	Windows 11 Pro 64
	FreeDOS 3.0
Serviceability	AC adapter
	Solid-state drive
	Memory modules

2 Getting to know your computer

Your computer features top-rated components. This chapter provides details about your components, where they are located, and how they work.

Right side

Identify the components on the right side of the computer.

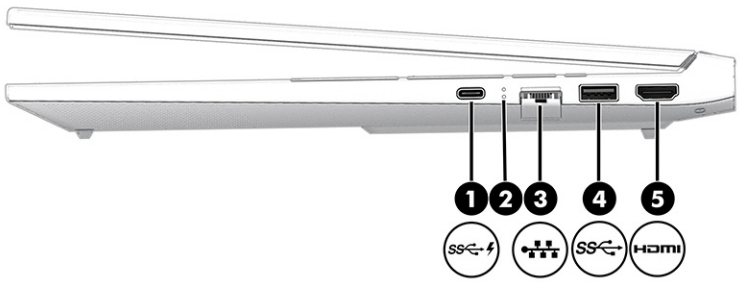

Table 2-1 **Right-side components and their descriptions**

Component			Description
(1)		USB Type-C® SuperSpeed 5 Gbps port with HP Sleep and Charge and DisplayPort™ output	Connects a USB device, provides high-speed data transfer, and charges small devices (such as a smartphone), even when the computer is off. NOTE: Use a standard USB Type-C charging cable or cable adapter (purchased separately) when charging a small external device. – and – Connects a display device that has a USB Type-C connector, providing DisplayPort output.
(2)		RJ-45 (network) status lights	• White: The network is connected. • Amber: Activity is occurring on the network.
(3)		RJ-45 (network) jack	Connects a network cable.
(4)		USB SuperSpeed 5 Gbps port	Connects a USB device, provides high-speed data transfer, and (for select products) charges small devices (such as a smartphone) when the computer is on or in Sleep mode. NOTE: Use a standard USB Type-A charging cable or cable adapter (purchased separately) when charging a small external device.
(5)		HDMI port	Connects an optional video or audio device, such as a high-definition television, any compatible digital or audio component, or a high-speed High-Definition Multimedia Interface (HDMI) device.

Left side

Identify the components on the left side of the computer.

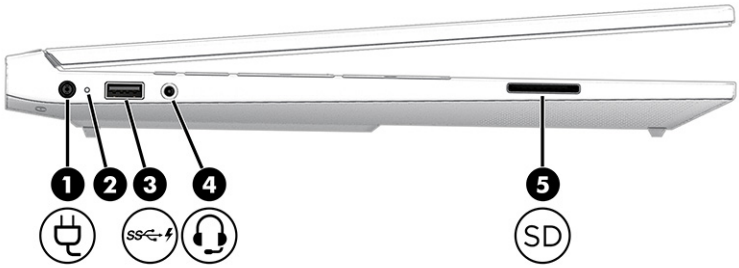

Table 2-2 **Left-side components and their descriptions**

Component			Description
(1)		Power connector	Connects an AC adapter.
(2)		AC adapter and battery light	• White: The AC adapter is connected and the battery is fully charged. • Blinking amber: The AC adapter is disconnected and the battery has reached a low battery level. • Amber: The AC adapter is connected and the battery is charging. • Off: The battery is not charging.
(3)		USB SuperSpeed 5 Gbps port with HP Sleep and Charge	Connects a USB device, provides high-speed data transfer, and charges small devices (such as a smartphone), even when the computer is off. NOTE: Use a standard USB Type-A charging cable or cable adapter (purchased separately) when charging a small external device.
(4)		Audio-out (headphone)/Audio-in (microphone) combo jack	Connects optional powered stereo speakers, headphones, earbuds, a headset, or a television audio cable. Also connects an optional headset microphone. This jack does not support optional standalone microphones. WARNING! To reduce the risk of personal injury, adjust the volume before putting on headphones, earbuds, or a headset. For additional safety information, see the *Regulatory, Safety, and Environmental Notices*. To access this guide: ▪ Select the **Search** icon in the taskbar, type `HP Documentation` in the search box, and then select **HP Documentation**. NOTE: When a device is connected to the jack, the computer speakers are disabled.

Table 2-2 **Left-side components and their descriptions (continued)**

Component			Description
(5)	SD	Memory card reader (select products only)	Reads optional memory cards that enable you to store, manage, share, or access information. To insert a card: 1. Hold the card label-side up, with connectors facing the computer. 2. Insert the card into the memory card reader, and then press in on the card until it is firmly seated. To remove a card: ■ Press in on the card, and then remove it from the memory card reader.

Display

The computer display can include essential components such as speakers, antennas, cameras, and microphones.

Low blue light mode (select products only)

Your computer display is shipped from the factory in low blue light mode for improved eye comfort and safety. Also, blue light mode automatically adjusts blue light emissions when you are using the computer at night or for reading.

⚠ **WARNING!** To reduce the risk of serious injury, read the *Safety & Comfort Guide*. It describes proper workstation setup and proper posture, health, and work habits for computer users. The *Safety & Comfort Guide* also provides important electrical and mechanical safety information. The *Safety & Comfort Guide* is available on the web at http://www.hp.com/ergo.

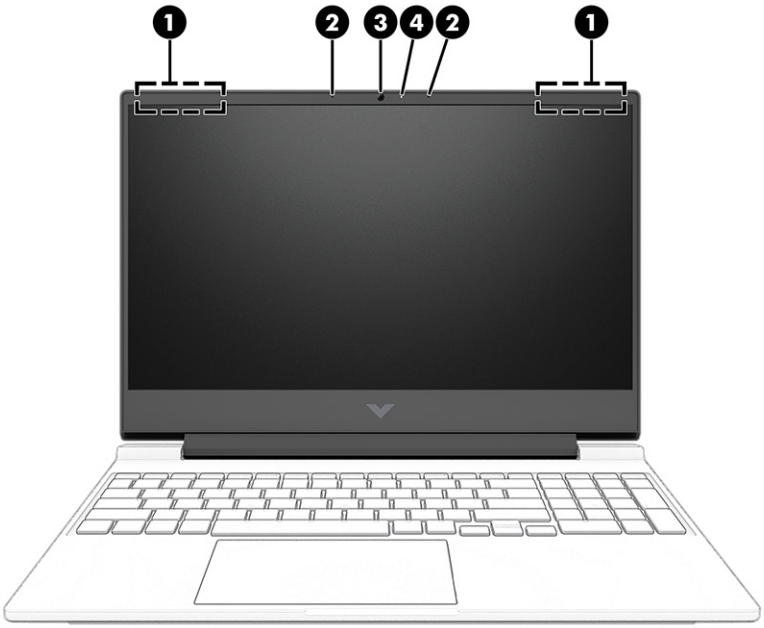

Table 2-3 Display components and their descriptions

Component		Description
(1)	WLAN antennas*	Send and receive wireless signals to communicate with wireless local area networks (WLANs).
(2)	Internal microphones (2)	Record sound.
(3)	Camera	Allows you to video chat, record video, and record still images. Some cameras also allow a facial recognition logon to Windows, instead of a password logon. **NOTE:** Camera functions vary depending on the camera hardware and software installed on your product.
(4)	Camera light	On: The camera is in use.

*The antennas are not visible from the outside of the computer. For optimal transmission, keep the areas immediately around the antennas free from obstructions.

For wireless regulatory notices, see the section of the *Regulatory, Safety, and Environmental Notices* that applies to your country or region.

To access this guide:

- Select the **Search** icon in the taskbar, type `HP Documentation` in the search box, and then select **HP Documentation**.

Keyboard area

Keyboards can vary by language.

NOTE: The keyboard area, including the function keys and (select products only) power key, is disabled in stand, tent, and tablet modes. To enable the keyboard, including the power key, change to the clamshell mode.

Touchpad settings and components

Learn the touchpad settings and components.

Touchpad settings

Learn how to adjust touchpad settings.

Adjusting touchpad settings

Use these steps to adjust touchpad settings and gestures.

1. Select the **Search** icon in the taskbar, type `touchpad settings` in the search box, and then press enter.
2. Choose a setting.

Turning on the touchpad

Follow these steps to turn on the touchpad.

1. Select the **Search** icon in the taskbar, type `touchpad settings` in the search box, and then press enter.
2. Using an external mouse, click the **touchpad** button.

   If you are not using an external mouse, press the Tab key repeatedly until the pointer rests on the **touchpad** button. Then press the spacebar to select the button.

Touchpad components

Identify the touchpad components.

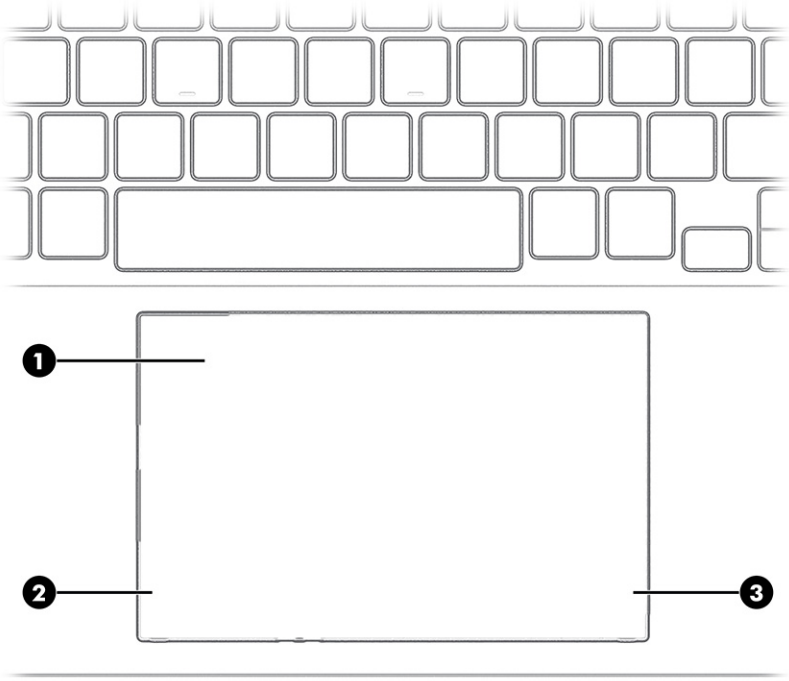

Table 2-4 **Touchpad components and their descriptions**

Component		Description
(1)	Touchpad zone	Reads your finger gestures to move the pointer or activate items on the screen.
(2)	Left control zone	Textured area that allows you to perform additional gestures.
(3)	Right control zone	Textured area that allows you to perform additional gestures.

Lights

Identify the lights on the computer.

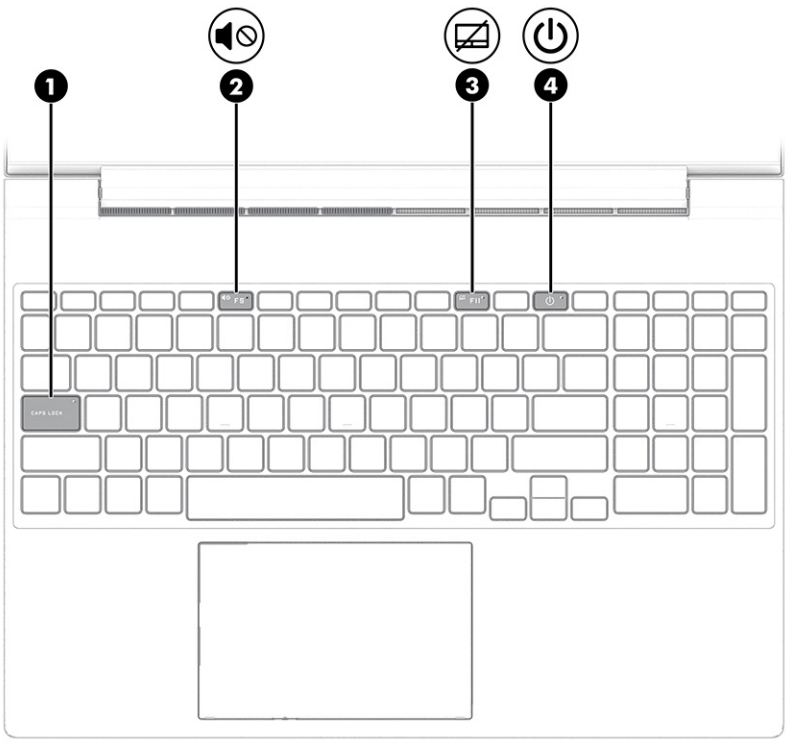

Table 2-5 **Lights and their descriptions**

Component		Description
(1)	Caps lock light	On: Caps lock is on, which switches the key input to all capital letters.
(2)	Mute light	• On: Computer sound is off. • Off: Computer sound is on.
(3)	Touchpad light	• On: The touchpad is off. • Off: The touchpad is on.

Table 2-5 Lights and their descriptions (continued)

Component		Description
(4)	Power light	• On: The computer is on. • Blinking (select products only): The computer is in the Sleep state, a power-saving state. The computer shuts off power to the display and other unnecessary components. • Off: Depending on your computer model, the computer is off, in Hibernation, or in Sleep. Hibernation is the power-saving state that uses the least amount of power.

Button

Identify the computer button.

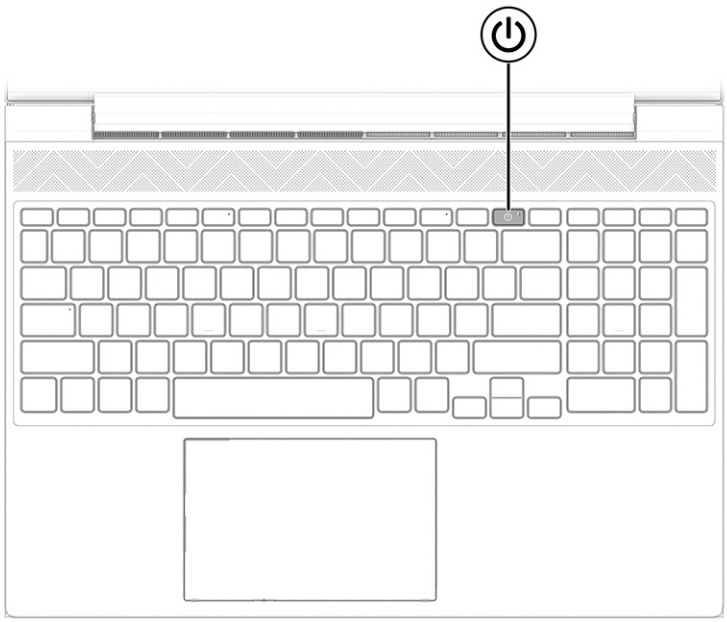

Table 2-6 Button and description

Component	Description
Power button	• When the computer is off, press the button briefly to turn on the computer. • When the computer is on, press the button briefly to initiate Sleep. • When the computer is in the Sleep state, press the button briefly to exit Sleep (select products only). • When the computer is in Hibernation, press the button briefly to exit Hibernation. **IMPORTANT:** Pressing and holding down the power button results in the loss of unsaved information. If the computer has stopped responding and shutdown procedures are ineffective, press and hold the power button down for at least 10 seconds to turn off the computer. To learn more about your power and sleep settings: ▪ Right-click the **Power** icon, and then select **Power and sleep settings**.

Special keys

Identify the special keys.

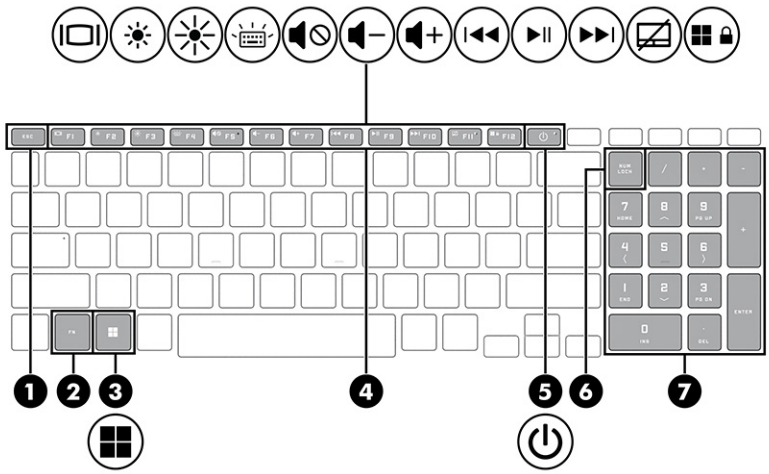

Table 2-7 Special keys and their descriptions

Component		Description
(1)	esc key	Displays system information when pressed in combination with the fn key.
(2)	fn key	Executes specific functions when pressed in combination with another key.

Table 2-7 Special keys and their descriptions (continued)

Component			Description
(3)		Windows key	Opens the Start menu. NOTE: Pressing the Windows key again will close the Start menu.
(4)		Action keys	Execute frequently used system functions as defined by the icon symbols on f1 through f12 function keys.
(5)		Power button	• When the computer is off, press the button briefly to turn on the computer. • When the computer is on, press the button briefly to initiate Sleep. • When the computer is in the Sleep state, press the button briefly to exit Sleep (select products only). • When the computer is in Hibernation, press the button briefly to exit Hibernation. IMPORTANT: Pressing and holding down the power button results in the loss of unsaved information. If the computer has stopped responding and shutdown procedures are ineffective, press and hold the power button down for at least 10 seconds to turn off the computer. To learn more about your power and sleep settings: ▪ Right-click the **Power** icon , and then select **Power and sleep settings**.
(6)		num lock key	Alternates between the navigational and numeric functions on the integrated numeric keypad.
(7)		Integrated numeric keypad	A separate keypad to the right of the alphabet keyboard. When num lock is pressed, the keypad can be used like an external numeric keypad. NOTE: If the keypad function is active when the computer is turned off, that function is reinstated when the computer is turned back on.

Bottom

Identify the bottom components.

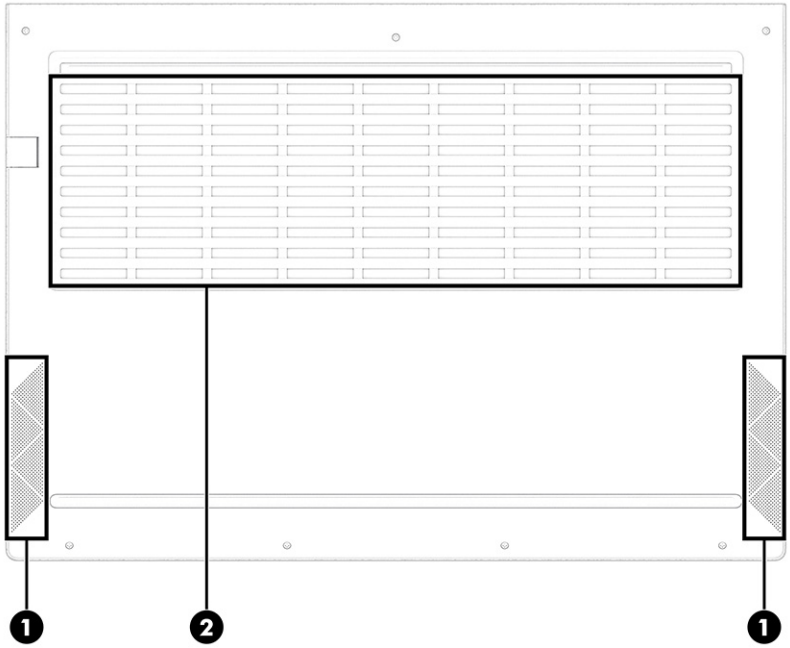

Table 2-8 **Bottom components and their descriptions**

Component		Description
(1)	Speakers (2)	Produce sound.
(2)	Vent	Enables airflow to cool internal components. **NOTE:** The computer fan starts up automatically to cool internal components and prevent overheating. It is normal for the internal fan to cycle on and off during routine operation.

Rear

Use the illustration and table to identify the rear component.

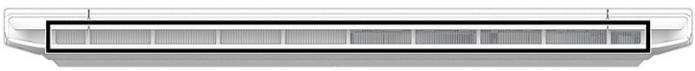

Table 2-9 **Rear component and its description**

Component	Description
Vent	Enables airflow to cool internal components. **NOTE:** The computer fan starts up automatically to cool internal components and prevent overheating. It is normal for the internal fan to cycle on and off during routine operation.

Labels

The labels affixed to the computer provide information that you might need when you troubleshoot system problems or travel internationally with the computer. Labels can be in paper form or imprinted on the product.

IMPORTANT: Check the following locations for the labels described in this section: the bottom of the computer, inside the battery bay, under the service door, on the back of the display, or on the bottom of a tablet kickstand.

- Service label—Provides important information to identify your computer. When contacting support, you might be asked for the serial number, the product number, or the model number. Locate this information before you contact support.

  Your service label will resemble one of the following examples. Refer to the illustration that most closely matches the service label on your computer.

Table 2-10 **Service label components**

Component	
(1)	Serial number
(2)	Product ID
(3)	HP product name and model number

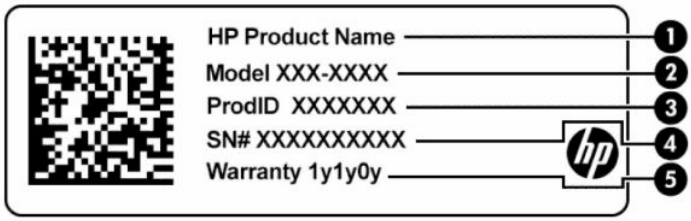

Table 2-11 **Service label components**

Component	
(1)	HP product name
(2)	Model number
(3)	Product ID
(4)	Serial number
(5)	Warranty period

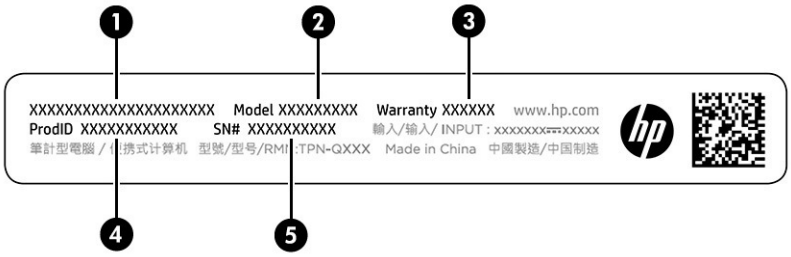

Table 2-12 **Service label components**

Component	
(1)	HP product name
(2)	Model number
(3)	Warranty period
(4)	Product ID
(5)	Serial number

- Regulatory labels—Provide regulatory information about the computer.
- Wireless certification labels—Provide information about optional wireless devices and the approval markings for the countries or regions in which the devices have been approved for use.

3 Illustrated parts catalog

Use this table to determine the spare parts that are available for the computer.

Computer major components

To identify the computer major components, use this illustration and table.

NOTE: HP continually improves and changes product parts. For complete and current information about supported parts for your computer, go to http://partsurfer.hp.com, select your country or region, and then follow the on-screen instructions.

NOTE: Details about your computer, including model, serial number, product key, and length of warranty, are on the service tag at the bottom of your computer.

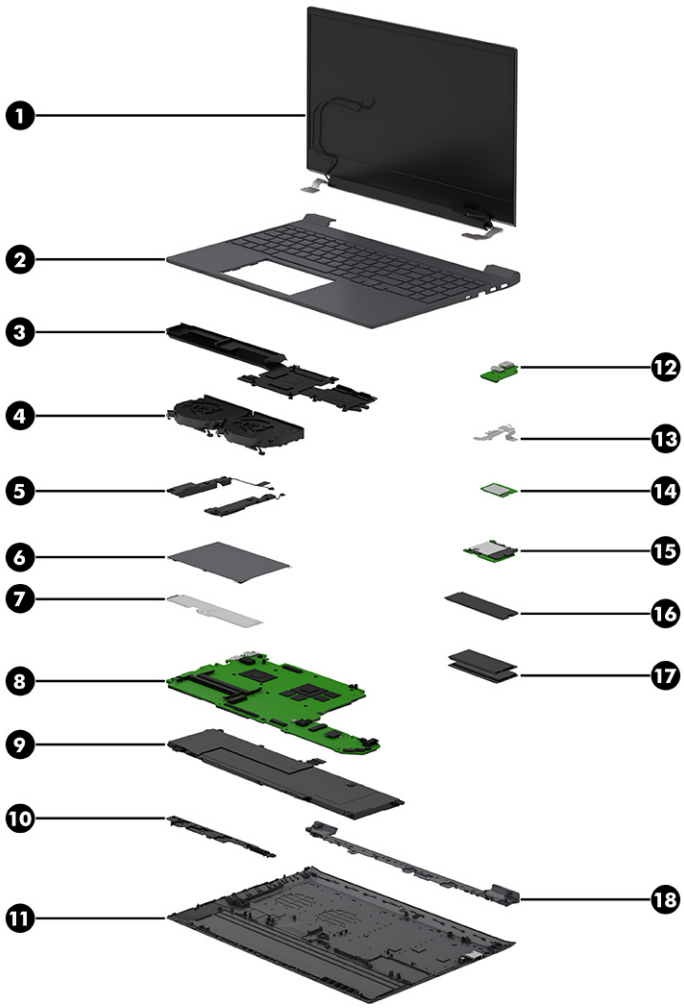

Table 3-1 Computer major component descriptions and part numbers

Item	Component	Spare part number
(1)	**Display assembly** **NOTE:** Display spare parts are available only as subcomponents. For spare part information, see Display assembly subcomponents on page 20.	
(2)	**Top cover with keyboard** **NOTE:** For a detailed list of country codes, see Top cover with keyboard on page 62.	
	Ceramic white	N13297-*xx*1
	Mica silver	N13298-*xx*1
	Performance blue	N13299-*xx*1
(3)	**Heat sink assembly**	
	For use in models with RTX 3050 or 3050Ti	N13305-001
	For use in models with GTX 1650 graphics	N13306-001
(4)	**Fan assembly**	N13304-001
(5)	**Speakers**	N13315-001
(6)	**Touchpad** **NOTE:** The touchpad cable is available as spare part number N13312-001.	
	Ceramic white	N13309-001
	Mica silver	N13310-001
	Performance blue	N13311-001
(7)	**Touchpad bracket**	not available as a spare part
(8)	**System board** **NOTE:** The system board repair kit is available as spare part number N18865-888. All system boards use the following part numbers: *xxxxxx*-001: Non-Windows operating systems *xxxxxx*-601: Windows operating system	
	Intel Core i7-12700H processor and NVIDIA GeForce RTX 3050 Ti graphics	N13292-*xx*1
	Intel Core i7-12700H processor and NVIDIA GeForce RTX 3050 graphics	N13290-*xx*1
	Intel Core i7-12700H processor and NVIDIA GeForce GTX 1650 graphics	N13288-*xx*1
	Intel Core i7-12650H processor and NVIDIA GeForce RTX 3050 Ti graphics	N15770-*xx*1
	Intel Core i7-12650H processor and NVIDIA GeForce RTX 3050 graphics	N15768-*xx*1
	Intel Core i5-12500H processor and NVIDIA GeForce RTX 3050 Ti graphics	N13291-*xx*1
	Intel Core i5-12500H processor and NVIDIA GeForce RTX 3050 graphics	N13289-*xx*1
	Intel Core i5-12500H processor and NVIDIA GeForce GTX 1650 graphics	N13287-*xx1*
	Intel Core i5-12450H processor and NVIDIA GeForce RTX 3050 Ti graphics	N15769-*xx*1
	Intel Core i5-12450H processor and NVIDIA GeForce RTX 3050 graphics	N15767-*xx*1

Table 3-1 Computer major component descriptions and part numbers (continued)

Item	Component	Spare part number
	Intel Core i5-12450H processor and NVIDIA GeForce GTX 1650 graphics	N15766-*xx*1
(9)	**Battery** **IMPORTANT:** To avoid damage to the system board, be sure to use the correct battery for the graphics used in the computer.	
	4 cell, 70 Whr, for use in models with GeForce RTX 3050 or 3050 Ti graphics	M39179-005
	3 cell, 52.5 Whr, for use in models with GeForce GTX 1650 graphics	L84394-005
(10)	**Dummy fin**	N13308-001
(11)	**Bottom cover**	
	Ceramic white	N13316-001
	Mica silver	N13317-001
	Performance blue	N13318-001
(12)	**I/O board** **NOTE:** The I/O board cable is available as spare part number N13301-001.	N13300-001
(13)	**I/O board bracket**	not available as a spare part
(14)	**WLAN module**	
	Intel AX211 Wi-Fi 6e Bluetooth 5.2 WLAN	M53366-005
	Mediatek Wi-Fi 6 MT7921 + Bluetooth 5.2	M74879-005
(15)	**Card reader** **NOTE:** The card reader cable is available as spare part number N13303-001.	N13302-001
(16)	**Solid-state drive** (PCIe-4 × 4)	
	1 TB	M16560-001
	512 GB	M17436-001
	256 GB	M52025-001
(17)	**Memory module** (DDR4-3200)	
	8 GB	L46598-001
	4 GB	L83673-001
(18)	**Plastic rear vent**	N13307-001
*	**Power connector and cable**	N13314-001
*	**RJ-45 (network) jack door**	
	Ceramic white	N13335-001
	Mica silver	N13336-001
	Performance blue	N13337-001

*not illustrated

Display assembly subcomponents

To identify the display assembly subcomponents, use this illustration and table.

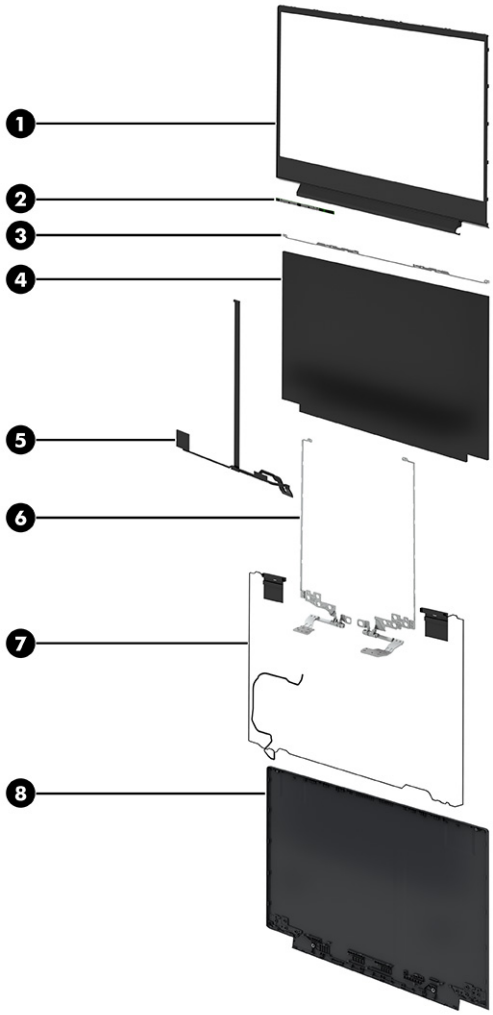

Table 3-2 **Display component descriptions and part numbers**

Item	Component	Spare part number
(1)	**Bezel**	N13327-001
(2)	**Camera module**	N13328-001
(3)	**Top bracket**	N13330-001
(4)	**Display panel**	
	FHD, SVA, 250 nits	N13293-001
	FHD, UWVA, 250 nits	N13294-001
	UWVA, 250 nits, 144 Hz	N13295-001
	UWVA, 300 nits	N13296-001
(5)	**Display cable**	

Table 3-2 **Display component descriptions and part numbers (continued)**

Item	Component	Spare part number
	Standard models	N13332-001
	144 Hz models	N13331-001
(6)	**Display hinges and brackets** (includes left and right hinges)	N13329-001
(7)	**WLAN antenna kit** (includes antenna cables and transceivers)	
	Models with a 300 nit panel	N13325-001
	Models with a 250 nit panel	N13326-001
(8)	**Display back cover** (includes antennas)	
	Ceramic white models with a 300 nit panel	N13319-001
	Mica silver models with a 300 nit panel	N13320-001
	Performance blue models with a 300 nit panel	N13321-001
	Ceramic white models with a 250 nit panel	N13322-001
	Mica silver models with a 250 nit panel	N13323-001
	Performance blue models with a 250 nit panel	N13324-001
*	**Display panel adhesive** (includes panel adhesive and bezel adhesive)	N13334-001
*not illustrated		

Miscellaneous parts

To identify the miscellaneous parts, use this table.

Table 3-3 **Miscellaneous part descriptions and part numbers**

Component	Spare part number
AC adapter (PFC, Smart, slim, 4.5 mm)	
200 W	L00818-850
150 W	L32661-001
USB External DVD±RW drive	747080-001
HMDI-to-VGA adapter	701943-001
USB-C-to-USB-A hub	916838-001
HP Elite USB-C Multi Port Hub	L39572-001
System board repair kit	N18865-888
Display adhesive kit (includes display cover adhesive and bezel adhesive)	N13334-001
Screw Kit	N13333-001
Power cord (C5, 1.0 m [3.3 ft], conventional)	
Australia	L19358-001
Denmark	L19360-001

Table 3-3 Miscellaneous part descriptions and part numbers (continued)

Component	Spare part number
Europe (Austria, Belgium, Finland, France, Germany, the Netherlands, Norway, and Sweden)	L19361-001
India	L19363-001
Israel	L19362-001
Italy	L19364-001
Japan	L19365-001
North America	L19367-001
People's Republic of China	L19368-001
South Africa	L19369-001
South Korea	L19366-001
Switzerland	L19370-001
Taiwan	L19372-001
Thailand	L19371-001
Thailand (ADP + cord)	M85418-001
The United Kingdom	L19373-001
Power cord (C13, 1.0 m [3.3 ft], conventional)	
Australia	L22339-001
Denmark	L22334-001
Europe (Austria, Belgium, Finland, France, Germany, the Netherlands, Norway, and Sweden)	L22333-001
India	L22343-001
Israel	L22335-001
Japan	L22344-001
North America	L22331-001
People's Republic of China	L22341-001
South Africa	L22337-001
South Korea	L22340-001
Switzerland	L22336-001
Taiwan	L22342-001
Thailand	L22338-001
Thailand (ADP + cord)	M85413-001
The United Kingdom	L22332-001

4 Removal and replacement procedures preliminary requirements

Use this information to properly prepare to disassemble and reassemble the computer.

Tools required

You need the following tools to complete the removal and replacement procedures:

- Tweezers
- Nonconductive, nonmarking pry tool
- Magnetic Phillips P1 screwdriver

Service considerations

The following sections include some of the considerations that you must keep in mind during disassembly and assembly procedures.

NOTE: As you remove each subassembly from the computer, place the subassembly (and all accompanying screws) away from the work area to prevent damage.

Plastic parts

Using excessive force during disassembly and reassembly can damage plastic parts.

Cables and connectors

Handle cables with extreme care to avoid damage.

IMPORTANT: When servicing the computer, be sure that cables are placed in their proper locations during the reassembly process. Improper cable placement can damage the computer.

Apply only the tension required to unseat or seat the cables during removal and insertion. Handle cables by the connector whenever possible. In all cases, avoid bending, twisting, or tearing cables. Be sure that cables are routed so that they cannot be caught or snagged as you remove or replace parts. Handle flex cables with extreme care; these cables tear easily.

Drive handling

Note the following guidelines when handling drives.

IMPORTANT: Drives are fragile components. Handle them with care. To prevent damage to the computer, damage to a drive, or loss of information, observe these precautions:

Before removing or inserting a hard drive, shut down the computer. If you are unsure whether the computer is off or in Hibernation, turn the computer on, and then shut it down through the operating system.

Before handling a drive, be sure that you are discharged of static electricity. While handling a drive, avoid touching the connector.

Before removing an optical drive, be sure that a disc is not in the drive, and be sure that the optical drive tray is closed.

Handle drives on surfaces covered with at least 2.54 cm (1 inch) of shock-proof foam.

Avoid dropping drives from any height onto any surface.

After removing a hard drive or an optical drive, place it in a static-proof bag.

Avoid exposing an internal hard drive to products that have magnetic fields, such as monitors or speakers.

Avoid exposing a drive to temperature extremes or liquids.

If a drive must be mailed, place the drive in a bubble pack mailer or other suitable form of protective packaging, and label the package “FRAGILE.”

Electrostatic discharge information

A sudden discharge of static electricity from your finger or other conductor can destroy static-sensitive devices or microcircuitry. Often the spark is neither felt nor heard, but damage occurs. An electronic device exposed to electrostatic discharge (ESD) might not appear to be affected at all and can work perfectly throughout a normal cycle. The device might function normally for a while, but it has been degraded in the internal layers, reducing its life expectancy.

Networks built into many integrated circuits provide some protection, but in many cases, the discharge contains enough power to alter device parameters or melt silicon junctions.

IMPORTANT: To prevent damage to the device when you remove or install internal components, observe these precautions:

Keep components in their electrostatic-safe containers until you are ready to install them.

Before touching an electronic component, discharge static electricity by using the guidelines described Personal grounding methods and equipment on page 25.

Avoid touching pins, leads, and circuitry. Handle electronic components as little as possible.

If you remove a component, place it in an electrostatic-safe container.

Generating static electricity

Follow these static electricity guidelines.

- Different activities generate different amounts of static electricity.
- Static electricity increases as humidity decreases.

Table 4-1 **Static electricity occurrence based on activity and humidity**

	Relative humidity		
Event	**55%**	**40%**	**10%**
Walking across carpet	7,500 V	15,000 V	35,000 V
Walking across vinyl floor	3,000 V	5,000 V	12,000 V
Motions of bench worker	400 V	800 V	6,000 V
Removing DIPs (dual in-line packages) from plastic tube	400 V	700 V	2,000 V
Removing DIPs from vinyl tray	2,000 V	4,000 V	11,500 V
Removing DIPs from polystyrene foam	3,500 V	5,000 V	14,500 V
Removing bubble pack from PCB (printed circuit board)	7,000 V	20,000 V	26,500 V
Packing PCBs in foam-lined box	5,000 V	11,000 V	21,000 V
Multiple electric components can be packaged together in plastic tubes, trays, or polystyrene foam.			

NOTE: As little as 700 V can degrade a product.

Preventing electrostatic damage to equipment

Many electronic components are sensitive to ESD. Circuitry design and structure determine the degree of sensitivity. The following packaging and grounding precautions are necessary to prevent static electricity damage to electronic components.

- To avoid hand contact, transport products in static-safe containers such as tubes, bags, or boxes.
- Protect all electrostatic parts and assemblies with conductive or approved containers or packaging.
- Keep electrostatic-sensitive parts in their containers until they arrive at static-free stations.
- Place items on a grounded surface before removing them from their container.
- Always be properly grounded when touching a sensitive component or assembly.
- Avoid contact with pins, leads, or circuitry.
- Place reusable electrostatic-sensitive parts from assemblies in protective packaging or conductive foam.

Personal grounding methods and equipment

Using certain equipment can prevent static electricity damage to electronic components.

- **Wrist straps** are flexible straps with a maximum of 1 MΩ ±10% resistance in the ground cords. To provide proper ground, a strap must be worn snug against bare skin. The ground cord must be connected and fit snugly into the banana plug connector on the grounding mat or workstation.
- **Heel straps/Toe straps/Boot straps** can be used at standing workstations and are compatible with most types of shoes or boots. On conductive floors or dissipative floor mats, use them on both feet with a maximum of 1 MΩ ±10% resistance between the operator and ground.

Table 4-2 **Static shielding protection levels**

Static shielding protection levels	
Method	**Voltage**
Antistatic plastic	1,500
Carbon-loaded plastic	7,500
Metallized laminate	15,000

Grounding the work area

To prevent static damage at the work area, follow these precautions.

- Cover the work surface with approved static-dissipative material.
- Use a wrist strap connected to a properly grounded work surface and use properly grounded tools and equipment.
- Use static-dissipative mats, foot straps, or air ionizers to give added protection.
- Handle electrostatic sensitive components, parts, and assemblies by the case or PCB laminate. Handle them only at static-free work areas.
- Turn off power and input signals before inserting and removing connectors or test equipment.
- Use fixtures made of static-safe materials when fixtures must directly contact dissipative surfaces.
- Keep the work area free of nonconductive materials, such as ordinary plastic assembly aids and polystyrene foam.
- Use conductive field service tools, such as cutters, screwdrivers, and vacuums.
- Avoid contact with pins, leads, or circuitry.

Recommended materials and equipment

HP recommends certain materials and equipment to prevent static electricity.

- Antistatic tape
- Antistatic smocks, aprons, or sleeve protectors
- Conductive bins and other assembly or soldering aids
- Conductive foam
- Conductive tabletop workstations with ground cord of 1 MΩ ±10% resistance
- Static-dissipative table or floor mats with hard tie to ground
- Field service kits
- Static awareness labels
- Wrist straps and footwear straps providing 1 MΩ ±10% resistance
- Material handling packages

- Conductive plastic bags
- Conductive plastic tubes
- Conductive tote boxes
- Opaque shielding bags
- Transparent metallized shielding bags
- Transparent shielding tubes

Cleaning your computer

Cleaning your computer regularly removes dirt and debris so that your device continues to operate at its best. Use the following information to safely clean the external surfaces of your computer.

Enabling HP Easy Clean (select products only)

HP Easy Clean helps you to avoid accidental input while you clean the computer surfaces. This software disables devices such as the keyboard, touch screen, and touchpad for a preset amount of time so that you can clean all computer surfaces.

1. Start HP Easy Clean in one of the following ways:
   - Select the **Start** menu, and then select **HP Easy Clean**.

     – or –
   - Select the **HP Easy Clean** icon in the taskbar.

     – or –
   - Select **Start**, and then select the **HP Easy Clean** tile.
2. Now that your device is disabled for a short period, see Removing dirt and debris from your computer on page 27 for the recommended steps to clean the high-touch, external surfaces on your computer. After you remove the dirt and debris, you can also clean the surfaces with a disinfectant. See Cleaning your computer with a disinfectant on page 28 for guidelines to help prevent the spread of harmful bacteria and viruses.

Removing dirt and debris from your computer

Here are the recommended steps to clean dirt and debris from your computer.

For computers with wood veneer, see Caring for wood veneer (select products only) on page 29.

1. Wear disposable gloves made of latex (or nitrile gloves, if you are latex-sensitive) when cleaning the surfaces.
2. Turn off your device and unplug the power cord and other connected external devices. Remove any installed batteries from items such as wireless keyboards.

   ⚠ **CAUTION:** To prevent electric shock or damage to components, never clean a product while it is turned on or plugged in.

3. Moisten a microfiber cloth with water. The cloth should be moist, but not dripping wet.

IMPORTANT: To avoid damaging the surface, avoid abrasive cloths, towels, and paper towels.

4. Wipe the exterior of the product gently with the moistened cloth.

IMPORTANT: Keep liquids away from the product. Avoid getting moisture in any openings. If liquid makes its way inside your HP product, it can cause damage to the product. Do not spray liquids directly on the product. Do not use aerosol sprays, solvents, abrasives, or cleaners containing hydrogen peroxide or bleach that might damage the finish.

5. Start with the display (if applicable). Wipe carefully in one direction, and move from the top of the display to the bottom. Finish with any flexible cables, like power cord, keyboard cable, and USB cables.

6. Be sure that surfaces have completely air-dried before turning the device on after cleaning.

7. Discard the gloves after each cleaning. Clean your hands immediately after you remove the gloves.

See Cleaning your computer with a disinfectant on page 28 for recommended steps to clean the high-touch, external surfaces on your computer to help prevent the spread of harmful bacteria and viruses.

Cleaning your computer with a disinfectant

The World Health Organization (WHO) recommends cleaning surfaces, followed by disinfection, as a best practice for preventing the spread of viral respiratory illnesses and harmful bacteria.

After cleaning the external surfaces of your computer using the steps in Removing dirt and debris from your computer on page 27, Caring for wood veneer (select products only) on page 29, or both, you might also choose to clean the surfaces with a disinfectant. A disinfectant that is within HP's cleaning guidelines is an alcohol solution consisting of 70% isopropyl alcohol and 30% water. This solution is also known as rubbing alcohol and is sold in most stores.

Follow these steps when disinfecting high-touch, external surfaces on your computer:

1. Wear disposable gloves made of latex (or nitrile gloves, if you are latex-sensitive) when cleaning the surfaces.

2. Turn off your device and unplug the power cord and other connected external devices. Remove any installed batteries from items such as wireless keyboards.

CAUTION: To prevent electric shock or damage to components, never clean a product while it is turned on or plugged in.

3. Moisten a microfiber cloth with a mixture of 70% isopropyl alcohol and 30% water. The cloth should be moist, but not dripping wet.

CAUTION: Do not use any of the following chemicals or any solutions that contain them, including spray-based surface cleaners: bleach, peroxides (including hydrogen peroxide), acetone, ammonia, ethyl alcohol, methylene chloride, or any petroleum-based materials, such as gasoline, paint thinner, benzene, or toluene.

IMPORTANT: To avoid damaging the surface, avoid abrasive cloths, towels, and paper towels.

4. Wipe the exterior of the product gently with the moistened cloth.

IMPORTANT: Keep liquids away from the product. Avoid getting moisture in any openings. If liquid makes its way inside your HP product, it can cause damage to the product. Do not spray liquids directly

on the product. Do not use aerosol sprays, solvents, abrasives, or cleaners containing hydrogen peroxide or bleach that might damage the finish.

5. Start with the display (if applicable). Wipe carefully in one direction, and move from the top of the display to the bottom. Finish with any flexible cables, like power cord, keyboard cable, and USB cables.
6. Be sure that surfaces have completely air-dried before turning the device on after cleaning.
7. Discard the gloves after each cleaning. Clean your hands immediately after you remove the gloves.

Caring for wood veneer (select products only)

Your product might feature high-quality wood veneer. As with all natural wood products, proper care is important for best results over the life of the product. Because of the nature of natural wood, you might see unique variations in the grain pattern or subtle variations in color, which are normal.

- Clean the wood with a dry, static-free microfiber cloth or chamois.
- Avoid cleaning products containing substances such as ammonia, methylene chloride, acetone, turpentine, or other petroleum-based solvents.
- Do not expose the wood to sun or moisture for long periods of time.
- If the wood becomes wet, dry it by dabbing with an absorbent, lint-free cloth.
- Avoid contact with any substance that might dye or discolor the wood.
- Avoid contact with sharp objects or rough surfaces that might scratch the wood.

See Removing dirt and debris from your computer on page 27 for the recommended steps to clean the high-touch, external surfaces on your computer. After you remove the dirt and debris, you can also clean the surfaces with a disinfectant. See Cleaning your computer with a disinfectant on page 28 for sanitizing guidelines to help prevent the spread of harmful bacteria and viruses.

Packaging and transporting guidelines

Follow these grounding guidelines when packaging and transporting equipment.

- To avoid hand contact, transport products in static-safe tubes, bags, or boxes.
- Protect ESD-sensitive parts and assemblies with conductive or approved containers or packaging.
- Keep ESD-sensitive parts in their containers until the parts arrive at static-free workstations.
- Place items on a grounded surface before removing items from their containers.
- Always be properly grounded when touching a component or assembly.
- Store reusable ESD-sensitive parts from assemblies in protective packaging or nonconductive foam.
- Use transporters and conveyors made of antistatic belts and roller bushings. Be sure that mechanized equipment used for moving materials is wired to ground and that proper materials are selected to avoid static charging. When grounding is not possible, use an ionizer to dissipate electric charges.

Accessing support information

To find the HP support that you need, use this information.

Table 4-3 Support information locations

Service consideration	Path to access information
Records of reported failure incidents stored on the computer	**Windows:** Pre-operating system failures are logged in the BIOS Event Log. To view the BIOS Event Log: 1. Press the power button. 2. Immediately and repeatedly press esc when the power button light turns white. **NOTE:** If you do not press esc at the appropriate time, you must restart the computer and again repeatedly press esc when the power button light turns white to access the utility. 3. Press f10 to enter the BIOS setup. 4. (On commercial products) Under the **Main** tab, select **BIOS event log**, and then select **View BIOS Event Log**. - or - (On consumer products) Under the **Main** tab, select **System Log**. Post-operating system failures are logged in the Event Viewer. 1. Turn on the computer and allow the operating system to open. 2. Select the search icon in the taskbar. 3. Type `Event Viewer`, and then press enter. 4. Select the log from the left panel. Details display in the right panel. **Chrome:** 1. Go to support.google.com/chrome. 2. Search `collect Chrome device logs`.
Technical bulletins	To locate technical bulletins: 1. Go to www.hp.com. 2. Place the cursor over **Problem solving** to display more options. 3. Select **Support & Troubleshooting**. 4. Type the serial number, product number, or product name to go to the product support page. 5. Select **Advisories** to view technical bulletins.
Repair professionals	To locate repair professionals: 1. Go to www.hp.com. 2. Place the cursor over **Support resources** to display more options. 3. Select **Authorized service providers**.

Table 4-3 Support information locations (continued)

Service consideration	Path to access information
Component and diagnosis information, failure detection, and required action	To locate diagnosis information and actions: 1. Go to http://www.hp.com/go/techcenter/pcdiags. 2. Select **Get Support**. 3. Near the bottom of the window, select **Notebook PCs**, and then select your location.

5 Removal and replacement procedures for Customer Self-Repair parts

This chapter provides removal and replacement procedures for Customer Self-Repair parts.

NOTE: The Customer Self-Repair program is not available in all locations. Installing a part that is not supported by the Customer Self-Repair program can void your warranty. Check your warranty to determine whether Customer Self-Repair is supported in your location.

Component replacement procedures

To remove and replace computer components, use these procedures.

NOTE: Details about your computer, including model, serial number, product key, and length of warranty, are on the service tag at the bottom of your computer.

NOTE: HP continually improves and changes product parts. For complete and current information about supported parts for your computer, go to http://partsurfer.hp.com, select your country or region, and then follow the on-screen instructions.

Make special note of each screw size and location during removal and replacement.

Preparation for disassembly

To prepare to disassemble the computer, use these steps.

See Removal and replacement procedures preliminary requirements on page 23 for initial safety procedures.

1. Turn off the computer. If you are unsure whether the computer is off or in Hibernation, turn the computer on, and then shut it down through the operating system.
2. Disconnect the power from the computer by unplugging the power cord from the computer.
3. Disconnect all external devices from the computer.

Solid-state drive

To remove the solid-state drive, use this procedure and illustration.

Table 5-1 Solid-state drive descriptions and part numbers

Description	Spare part number
1 TB	M16560-001
512 GB	M17436-001
256 GB	M52025-001

Before removing the solid-state drive, follow these steps:

1. Prepare the computer for disassembly (see Preparation for disassembly on page 32).
2. Remove the bottom cover (see Bottom cover on page 36).
3. Disconnect the battery cable from the system board (see Battery on page 38).

Remove the solid-state drive:

1. Remove the Phillips M2.0 × 2.5 screw **(1)** that secures the drive.
2. Pull the drive away from the socket to remove it **(2)**.

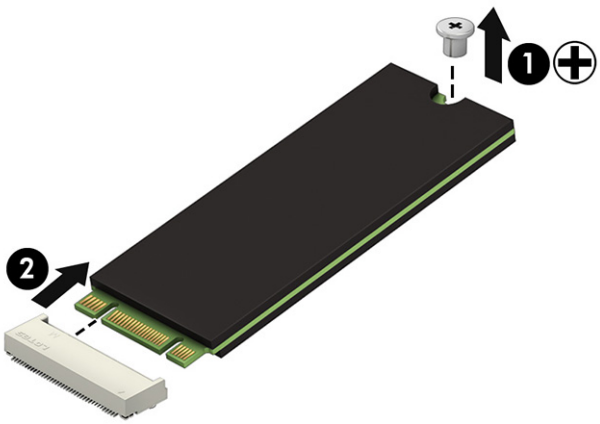

3. When installing a drive, be sure a thermal pad is installed on the top of the drive.

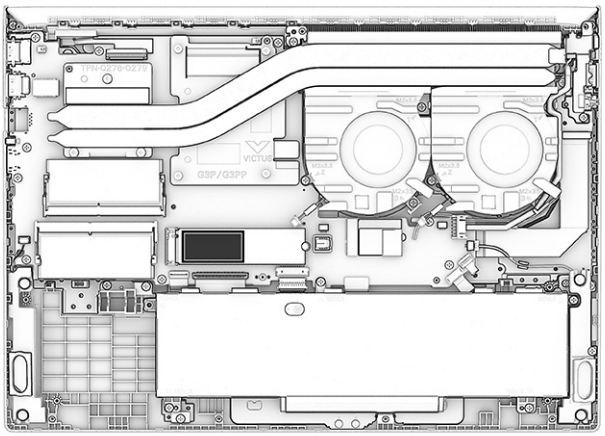

To install a solid-state drive, reverse the removal procedures.

NOTE: Solid-state drives are designed with a notch to prevent incorrect insertion.

Memory modules

To remove the memory modules, use this procedure and illustration.

Table 5-2 **Memory module descriptions and part numbers**

Description	Spare part number
8 GB, DDR4-3200	L46598-001
4 GB, DDR4-3200	L83673-001

Before removing the memory, follow these steps:

1. Prepare the computer for disassembly (see Preparation for disassembly on page 32).
2. Remove the bottom cover (see Bottom cover on page 36).
3. Disconnect the battery cable from the system board (see Battery on page 38).

If you are replacing a memory module, remove the existing memory module:

1. If present, pull the protective shielding up from the top and toward you to access the memory modules.
2. Spread the two retention clips outward **(1)** until the memory module tilts up at a 45° angle, and then remove the module **(2)**. Use the same procedure to remove all memory modules.

IMPORTANT: To prevent damage to the memory module, hold the memory module by the edges only. Do not touch the components on the memory module.

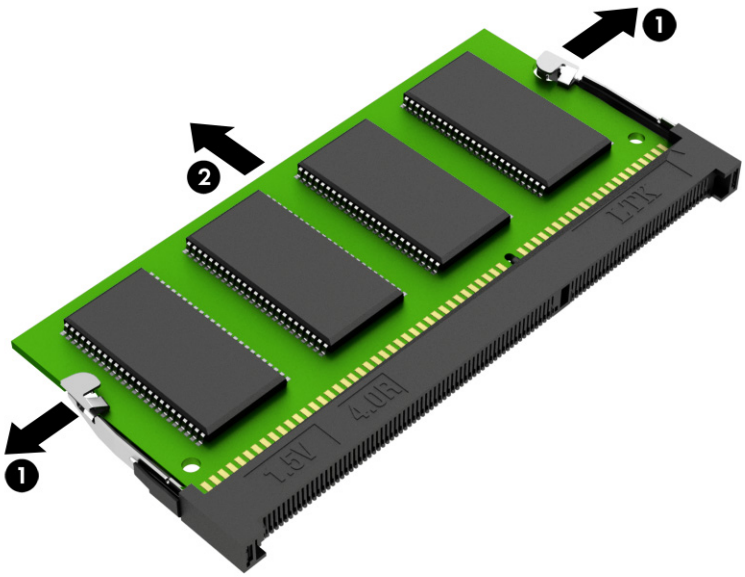

To protect a memory module after removal, place it in an electrostatic-safe container.

To install a memory module:

1. Align the notched edge of the module with the tab in the slot **(1)**, and then press the module into the slot at an angle until it is seated **(2)**.

2. Press down on the module until the side retention clips snap into place **(3)**.

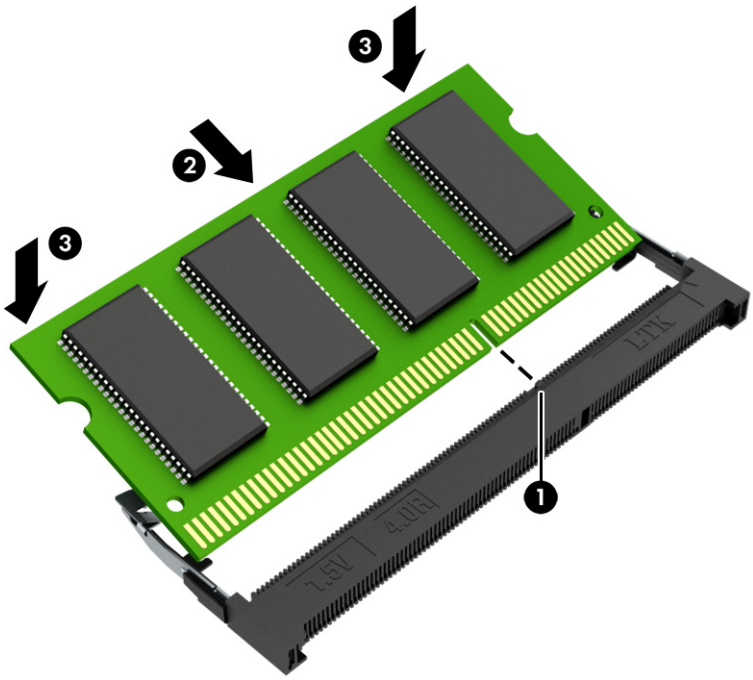

6 Removal and replacement procedures for authorized service provider parts

This chapter provides removal and replacement procedures for authorized service provider parts.

IMPORTANT: Components described in this chapter should be accessed only by an authorized service provider. Accessing these parts can damage the computer or void the warranty.

NOTE: Details about your computer, including model, serial number, product key, and length of warranty, are on the service tag at the bottom of your computer.

Component replacement procedures

To remove and replace computer components, use these procedures.

NOTE: HP continually improves and changes product parts. For complete and current information about supported parts for your computer, go to http://partsurfer.hp.com, select your country or region, and then follow the on-screen instructions.

Make special note of each screw size and location during removal and replacement.

Preparation for disassembly

To remove and replace computer components, use these procedures.

See Removal and replacement procedures preliminary requirements on page 23 for initial safety procedures.

1. Turn off the computer. If you are unsure whether the computer is off or in Hibernation, turn the computer on, and then shut it down through the operating system.
2. Disconnect the power from the computer by unplugging the power cord from the computer.
3. Disconnect all external devices from the computer.

Bottom cover

To remove the bottom cover, use this procedure and illustration.

Table 6-1 Bottom cover description and part number

Description	Spare part number
Bottom cover for use in ceramic white models	N13316-001
Bottom cover for use in mica silver models	N13317-001
Bottom cover for use in performance blue models	N13318-001

Before removing the bottom cover, prepare the computer for disassembly (see Preparation for disassembly on page 36).

Remove the bottom cover:

1. Close the computer and rest it upside down on a flat work surface with the front toward you.
2. Remove the seven Phillips M2.0 × 5.0 screws **(1)** that secure the bottom cover to the computer.

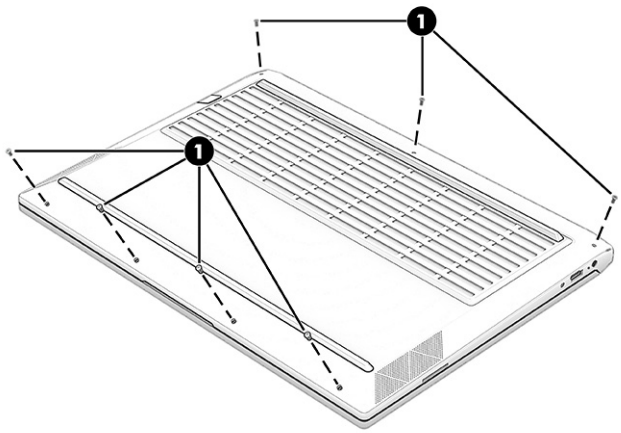

3. In one of the bottom corners, insert a thin, plastic tool in the seam between the bottom cover and computer **(1)** to release the cover.
4. Remove the bottom cover **(2)**.

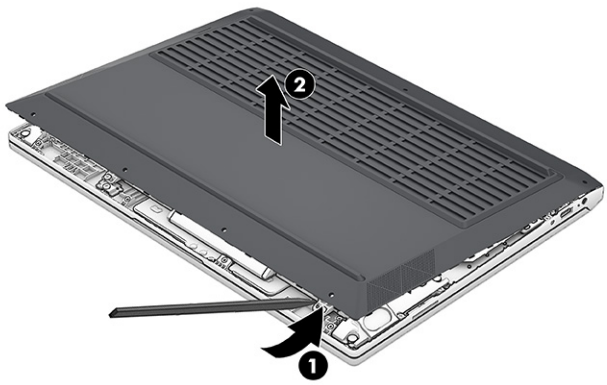

To replace the bottom cover, reverse the removal procedures.

When installing a bottom cover, make sure the thermal pad is installed as shown in the following illustration.

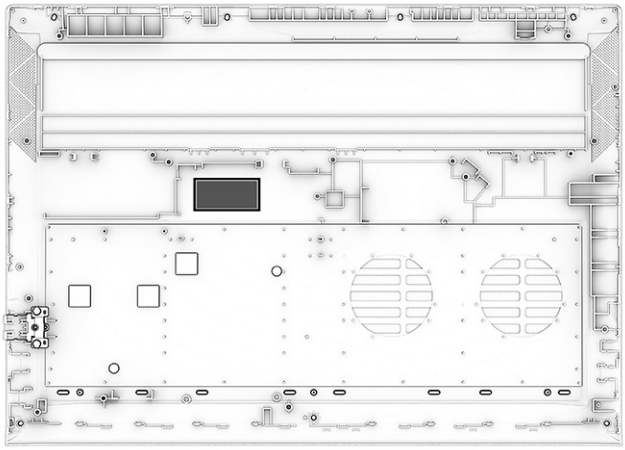

Battery

To remove the battery, use this procedure and illustration.

Table 6-2 Battery description and part number

Description	Spare part number
4 cell, 70 Whr battery for use in models with GeForce RTX 3050 or 3050 Ti graphics **IMPORTANT:** The connector pin assignments differ between batteries. To avoid damage to the system board, be sure to use the correct battery based on the graphics used in the computer.	M39179-005
3 cell, 52.5 Whr battery for use in models with GeForce GTX 1650 graphics	L84394-005

WARNING! To avoid personal injury and damage to the product:

- Do *not* puncture, twist, or crack the battery.
- Do *not* cause an external puncture or rupture to the battery, which can cause a short inside the battery, which can result in battery thermal runaway.
- Do *not* handle or touch the battery enclosure with sharp objects such as tweezers or pliers, which might puncture the battery.
- Do *not* compress or squeeze the battery case with tools or heavy objects stacked on top of the case. These actions can apply undue force on the battery.
- Do *not* touch the connectors with any metallic surface or object, such as metal tools, screws, or coins, which can cause shorting across the connectors.

Before removing the battery, follow these steps:

1. Prepare the computer for disassembly (see Preparation for disassembly on page 36).
2. Remove the bottom cover (see Bottom cover on page 36).

WARNING! To reduce potential safety issues, use only the user-replaceable battery provided with the computer, a replacement battery provided by HP, or a compatible battery purchased from HP.

IMPORTANT: Removing a battery that is the sole power source for the computer can cause loss of information. To prevent loss of information, save your work or shut down the computer through Windows before you remove the battery.

Remove the battery:

1. Disconnect the battery cable **(1)** from the system board.
2. Remove the six Phillips M2.0 × 5.0 screws **(2)** that secure the battery to the computer.
3. Remove the battery **(3)**.

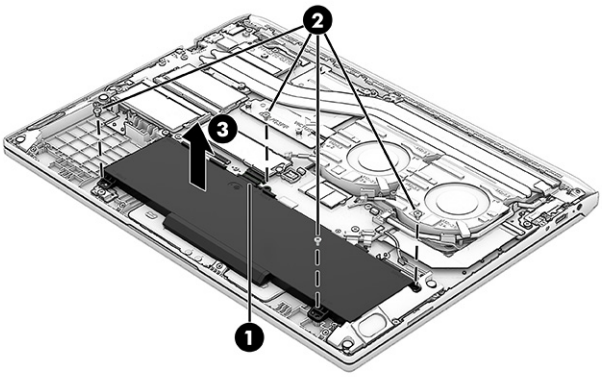

To install the battery, reverse the removal procedures.

Display subcomponents (without removing the display)

You can remove some display subcomponents without removing the entire display assembly from the computer. To remove the bezel, display panel, and camera module, use these procedures and illustrations.

Before removing the display subcomponents, follow these steps:

1. Prepare the computer for disassembly (see Preparation for disassembly on page 36).
2. Remove the bottom cover (see Bottom cover on page 36).
3. Disconnect the battery cable from the system board (see Battery on page 38).

Remove the display assembly:

1. You can remove the bezel with the display assembly connected to the computer. To remove the bezel:
   a. Flex the top **(1)**, the left and right sides **(2)**, and then the bottom of the bezel **(3)** to release it.
   b. Remove the bezel from the display **(4)**.

NOTE: The display assembly remains attached to the computer for these procedures.

The display bezel is available as spare part number N13327-001.

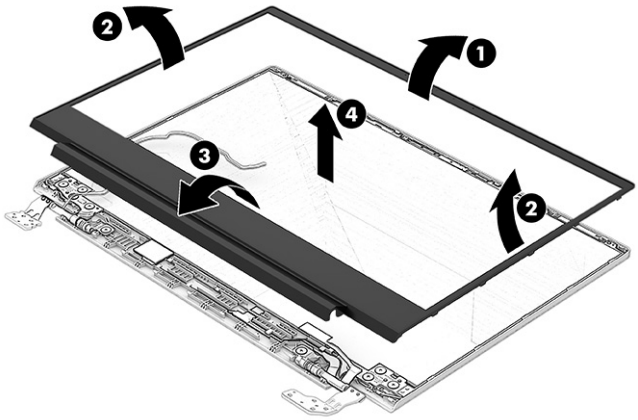

2. You can remove the display panel with the display assembly connected to the computer. To remove the display panel:

   a. At the top of the panel, use tweezers to grasp the end of the retention tape that is installed under the panel in three locations.

   b. While turning the tweezers **(1)**, wrap the tape around the tweezers as you continue to pull the tape **(2)** out from behind the display panel.

   c. Rotate the panel up and set it next to the display back cover **(3)**.

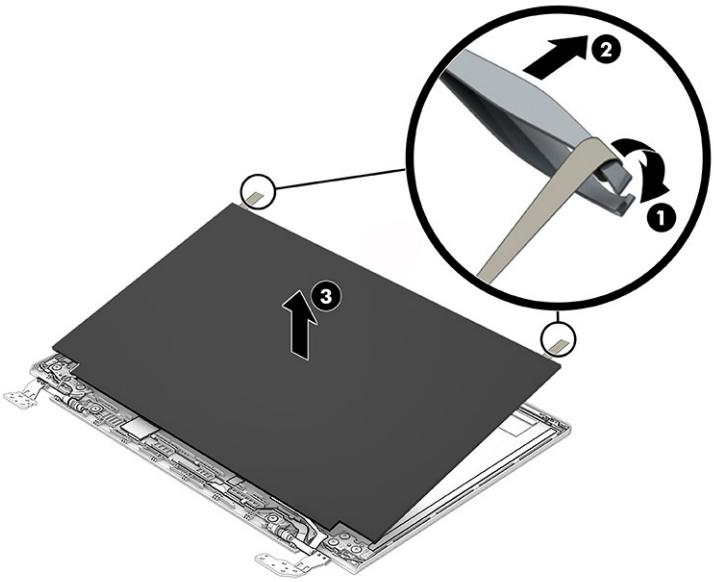

d. To disconnect the cable from the display panel, lift the tape from the connector on the panel **(1)**, and then disconnect the cable **(2)**.

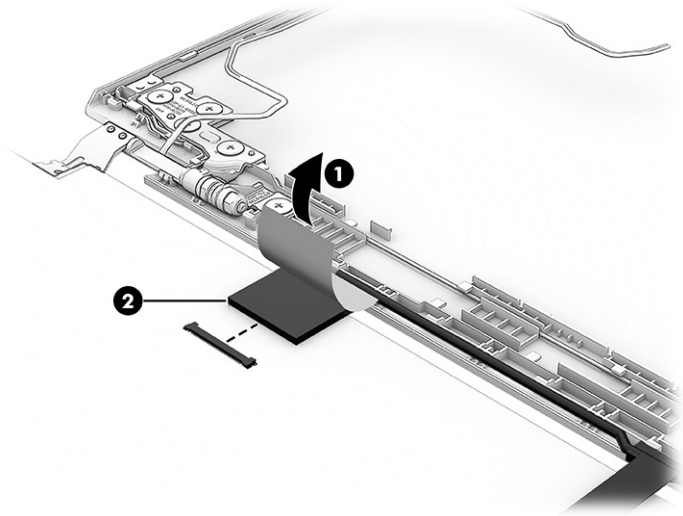

e. When installing the display panel, install the adhesive strips on each side of the display back cover as shown in the following illustration.

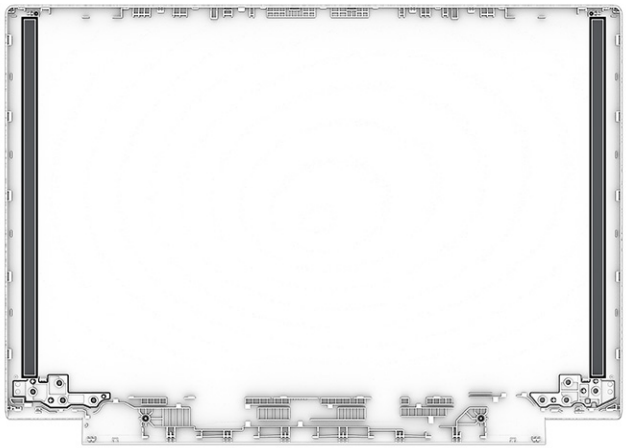

Display panels are available as the following spare part numbers:

N13293-001: FHD, SVA, 250 nits

N13294-001: FHD, UWVA, 250 nits

N13295-001: FHD, UWVA, 250 nits, 144 Hz

N13296-001: FHD, UWVA, 300 nits

The panel adhesive kit is available as spare part number N13334-001.

3. You can remove the camera module with the display assembly connected to the computer. To remove the camera module:

a. Remove the two Phillips 1.6 × 2.5 screws **(1)** that secure the top bracket, lift up the hinge brackets slightly **(2)**, and then pull the top bracket out from under the hinge brackets to remove it **(3)**. The top bracket is available as spare part number N13330-001.

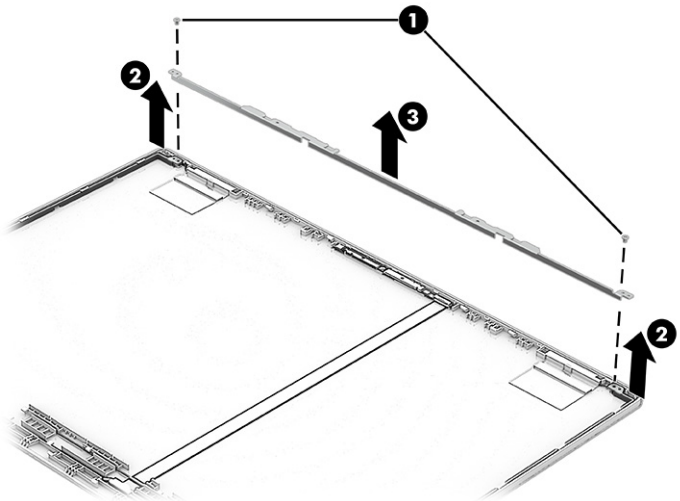

b. Use a tool to lift up evenly across the module and peel the module up from the display back cover **(1)**, and then disconnect the cable from the reverse ZIF connector on the module **(2)**. The camera module is available as spare part number N13328-001.

NOTE: For installation, note that the cable routes under the camera module before it connects to the module.

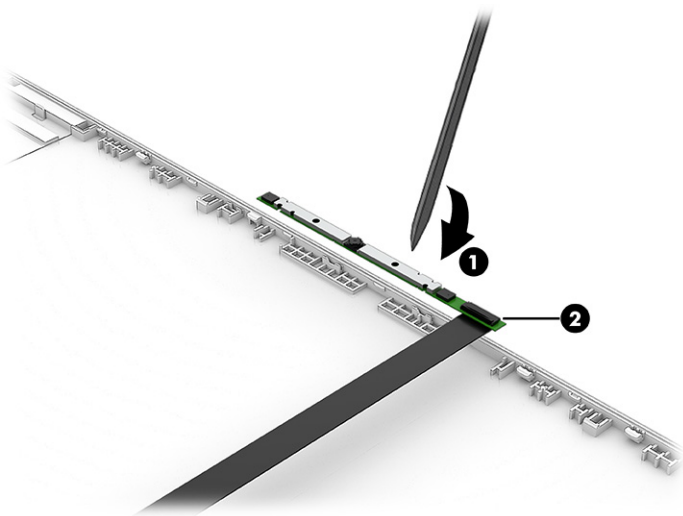

To install the camera and display panel, reverse these procedures.

WLAN module

To remove the WLAN module, use this procedure and illustration.

Table 6-3 **WLAN module descriptions and part numbers**

Description	Spare part number
Intel AX211 Wi-Fi 6e Bluetooth 5.2 WLAN	M53366-005
Mediatek Wi-Fi 6 MT7921 + Bluetooth 5.2	M74879-005

IMPORTANT: To prevent an unresponsive system, replace the wireless module only with a wireless module authorized for use in the computer by the governmental agency that regulates wireless devices in your country or region. If you replace the module and then receive a warning message, remove the module to restore device functionality, and then contact technical support.

Before removing the WLAN module, follow these steps:

1. Prepare the computer for disassembly (see Preparation for disassembly on page 36).
2. Remove the bottom cover (see Bottom cover on page 36).
3. Disconnect the battery cable from the system board (see Battery on page 38).

Remove the WLAN module:

1. Remove the plastic that covers the antennas **(1)**.
2. Remove the Phillips M2.0 × 2.5 screw **(2)**.
3. Carefully disconnect the two antenna cables from the module **(3)**, and then pull the module out of the socket to remove it **(4)**.

NOTE: When installing a WLAN module, be sure to match the numbers on the antenna cables with the numbers next to the connectors on the module.

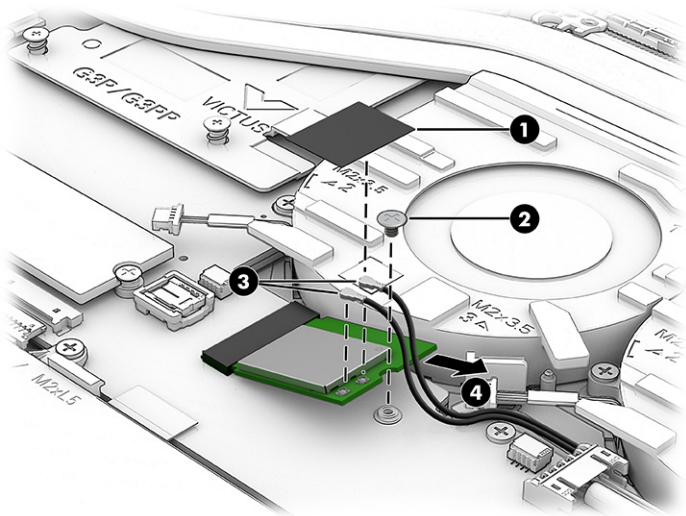

4. If the WLAN antenna is not connected to the terminal on the WLAN module, install a protective sleeve on the antenna connector, as shown in the following illustration.

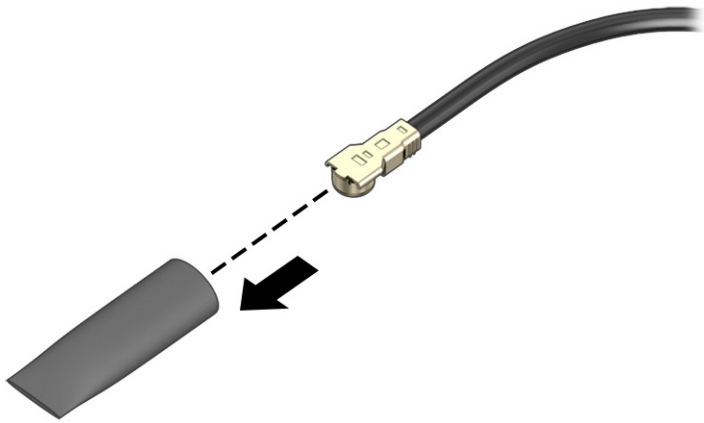

To install the WLAN module, reverse this procedure.

Speakers

To remove the speakers, use this procedure and illustration.

Table 6-4 **Speaker description and part number**

Description	Spare part number
Speaker Kit	N13315-001

Before removing the speakers, follow these steps:

1. Prepare the computer for disassembly (see Preparation for disassembly on page 36).
2. Remove the bottom cover (see Bottom cover on page 36).
3. Disconnect the battery cable from the system board (see Battery on page 38).

Remove the speakers:

1. Remove the two Phillips M2.0 × 2.0 broadhead screws **(1)** that secure each speaker to the computer.
2. Disconnect the speaker cables from the system board **(2)**.
3. Remove the speakers from the computer **(3)** .

NOTE: When removing the speakers, make note of the location of the rubber isolators. The absence of or damage to these isolators can result in degraded speaker performance.

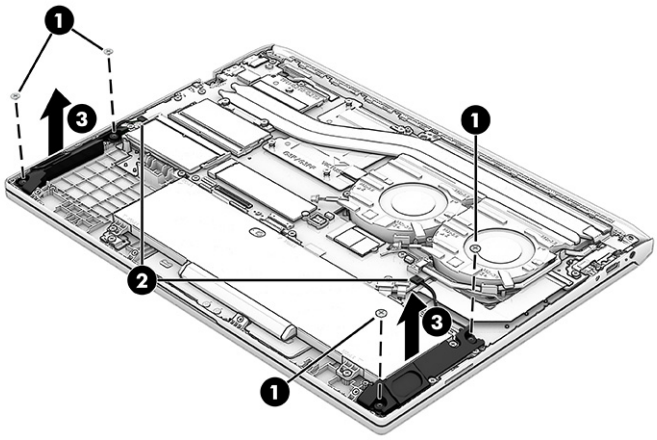

To install the speakers, reverse this procedure.

Fan assembly

To remove the fan assembly, use this procedure and illustration.

Table 6-5 **Fan description and part number**

Description	Spare part number
Fan assembly	N13304-001

Before removing the fan assembly, follow these steps:

1. Prepare the computer for disassembly (see Preparation for disassembly on page 36).
2. Remove the bottom cover (see Bottom cover on page 36).
3. Disconnect the battery cable from the system board (see Battery on page 38).

Remove the fan assembly:

1. Remove the power connector cable and WLAN antenna cables from the clips in the fan assembly **(1)**.
2. Disconnect the fan cables from the system board **(2)**.
3. Remove the six Phillips M2.0 × 3.5 screws **(3)** that secure the fan assembly to the computer.

4. Remove the fan assembly from the computer **(4)**.

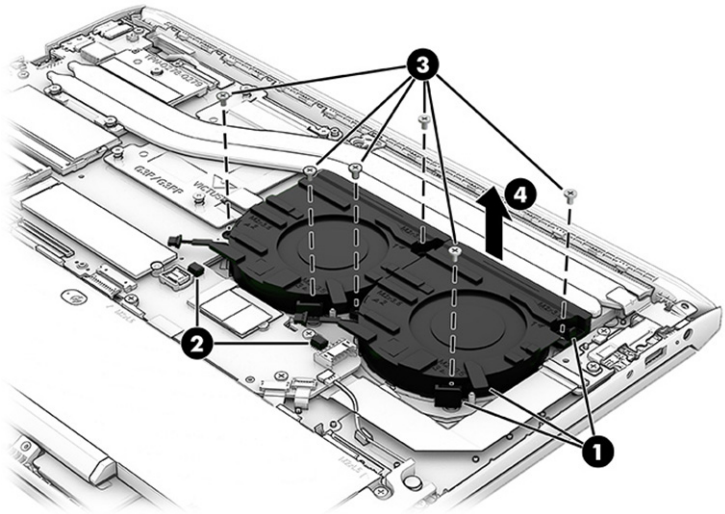

To install the fan assembly, reverse this procedure.

Power connector cable

To remove the power connector cable, use this procedure and illustration.

Table 6-6 Power connector cable description and part number

Description	Spare part number
Power connector cable	N13314-001

Before removing the power connector cable, follow these steps:

1. Prepare the computer for disassembly (see Preparation for disassembly on page 36).
2. Remove the bottom cover (see Bottom cover on page 36).
3. Disconnect the battery cable from the system board (see Battery on page 38).

Remove the power connector cable:

1. Remove the Phillips M2.0 × 4.0 screws **(1)** that secures the bracket, and then remove the bracket **(2)**.
2. Disconnect the cable from the system board **(3)**.

3. Remove the cable from the clips on the fan assembly **(4)**.

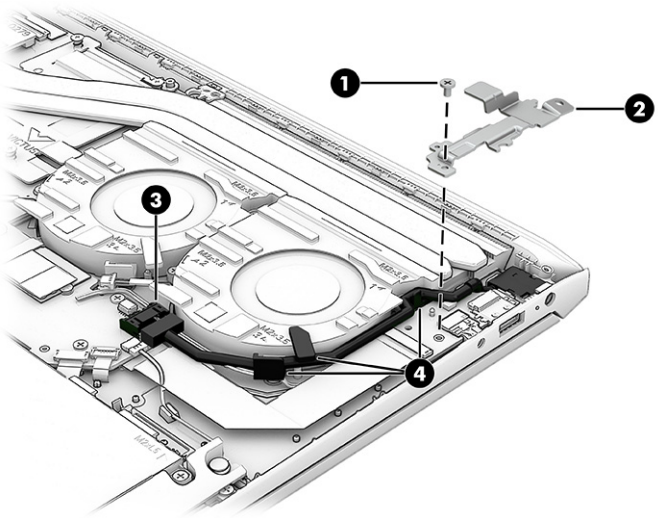

To install the power connector cable, reverse this procedure.

I/O board

To remove the I/O board, use this procedure and illustration.

Table 6-7 I/O board description and part number

Description	Spare part number
I/O board	N13300-001
I/O board cable	N13301-001

Before removing the I/O board, follow these steps:

1. Prepare the computer for disassembly (see Preparation for disassembly on page 36).
2. Remove the bottom cover (see Bottom cover on page 36).
3. Disconnect the battery cable from the system board (see Battery on page 38).

Remove the I/O board:

1. Remove the Phillips M2.0 × 3.0 screw **(1)** that secures the bracket to the computer, and then remove the bracket **(2)**.
2. Disconnect the cable from the ZIF connector on the I/O board **(3)**.

3. Lift the back of the board up, and then pull the board into the computer to remove it **(4)**.

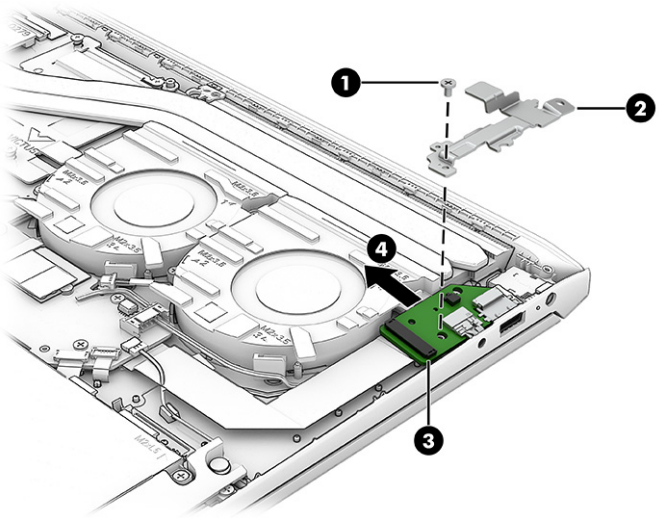

To install the I/O board, reverse this procedure.

Card reader

To remove the card reader, use this procedure and illustration.

Table 6-8 Card reader description and part number

Description	Spare part number
Card reader	N13302-001
Card reader cable	N13303-001

Before removing the card reader, follow these steps:

1. Prepare the computer for disassembly (see Preparation for disassembly on page 36).
2. Remove the bottom cover (see Bottom cover on page 36).
3. Remove the battery (see Battery on page 38).

Remove the card reader board:

1. Disconnect the cable from the ZIF connector on the system board **(1)**.
2. Remove the Phillips M2.0 × 4.0 screw **(2)** that secures the bracket, and then remove the bracket **(3)**.
3. Remove the two Phillips M2.0 × 2.5 screws **(4)** that secure the card reader to the computer.

4. Remove the card reader **(5)**.

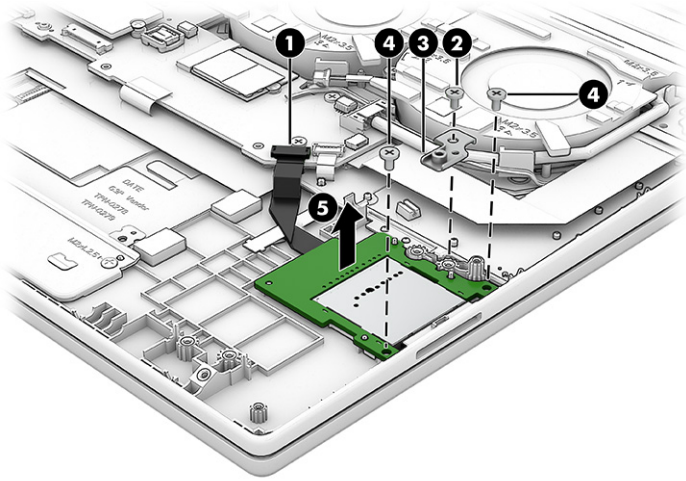

To install the card reader, reverse this procedure.

Heat sink

To remove the heat sink, use these procedures and illustrations.

Table 6-9 Heat sink descriptions and part numbers

Description	Spare part number
Heat sink, models with RTX 3050 or 3050Ti	N13305-001
Heat sink, models with GTX 1650 graphics	N13306-001

Before removing the heat sink, follow these steps:

1. Prepare the computer for disassembly (see Preparation for disassembly on page 36).
2. Remove the bottom cover (see Bottom cover on page 36).
3. Disconnect the battery cable from the system board (see Battery on page 38).

Remove the heat sink:

1. Remove the Phillips M2.0 × 2.0 screw **(1)** from the plastic holder at the top of the computer, and then remove the holder **(2)**.
2. In the order indicated on the heat sink, loosen the seven captive Phillips screws **(3)** that secure the heat sink to the system board.

3. Lift the left side of the heat sink up, and then pull it up and left to remove it **(4)**.

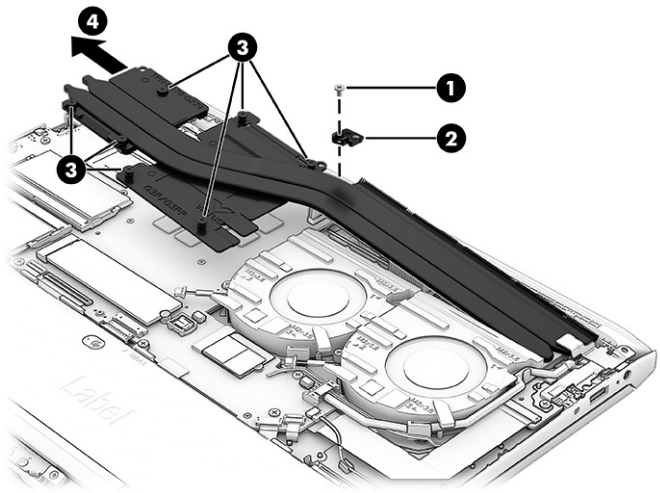

4. Thoroughly clean the thermal material from the surfaces of the heat sink and the system board components each time the heat sink is removed. Replacement thermal material is included with the heat sink and system board spare part kits. The following illustrations show the replacement thermal material locations.

   Thermal paste is used on the heat sink **(1)** and on the processor component on the system board **(2)**.

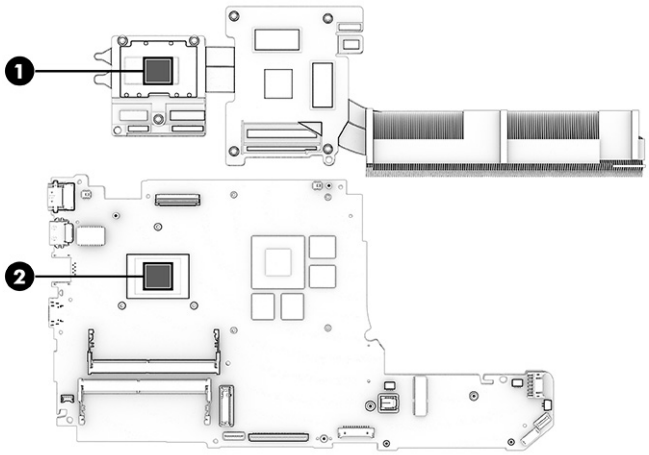

To install the heat sink, reverse this procedure.

System board

To remove the system board, use these procedures and illustrations.

Table 6-10 **System board descriptions and part numbers**

Description	Spare part number
System board (includes integrated processor) All system boards use the following part numbers: *xxxxxx*-001: Non-Windows operating systems *xxxxxx*-601: Windows operating system	
Intel Core i7-12700H processor and NVIDIA GeForce RTX 3050 Ti graphics	N13292-*xx*1
Intel Core i7-12700H processor and NVIDIA GeForce RTX 3050 graphics	N13290-*xx*1
Intel Core i7-12700H processor and NVIDIA GeForce GTX 1650 graphics	N13288-*xx*1
Intel Core i7-12650H processor and NVIDIA GeForce RTX 3050 Ti graphics	N15770-*xx*1
Intel Core i7-12650H processor and NVIDIA GeForce RTX 3050 graphics	N15768-*xx*1
Intel Core i5-12500H processor and NVIDIA GeForce RTX 3050 Ti graphics	N13291-*xx*1
Intel Core i5-12500H processor and NVIDIA GeForce RTX 3050 graphics	N13289-*xx*1
Intel Core i5-12500H processor and NVIDIA GeForce GTX 1650 graphics	N13287-*xx*1
Intel Core i5-12450H processor and NVIDIA GeForce RTX 3050 Ti graphics	N15769-*xx*1
Intel Core i5-12450H processor and NVIDIA GeForce RTX 3050 graphics	N15767-*xx*1
Intel Core i5-12450H processor and NVIDIA GeForce GTX 1650 graphics	N15766-*xx*1
System board repair kit	N18865-001

Before removing the system board, follow these steps:

1. Prepare the computer for disassembly (see Preparation for disassembly on page 36).
2. Remove the bottom cover (see Bottom cover on page 36).
3. Remove the battery (see Battery on page 38).
4. Remove the solid-state drive (see Solid-state drive on page 32).
5. Remove the fan assembly (see Fan assembly on page 45).
6. Remove the I/O board bracket (see I/O board on page 47).
7. If you need to replace the system board, remove the heat sink (see Heat sink on page 49).

NOTE: If you are not replacing the system board, do not remove the heat sink.

Remove the system board:

1. Disconnect the following cables from the system board:
   - Display cable **(1)** (ZIF)
   - Power connector cable **(2)**
   - I/O board cable from I/O board (ZIF) **(3)**

- Left speaker cable **(4)**
- Backlight cable (ZIF) **(5)**
- Card reader cable (ZIF) **(6)**
- Fan cable **(7)**
- Wireless antenna cables from the WLAN module **(8)**
- Fan cable **(9)**
- Keyboard cable (ZIF) **(10)**
- Touchpad cable (ZIF) **(11)**
- Right speaker cable **(12)**

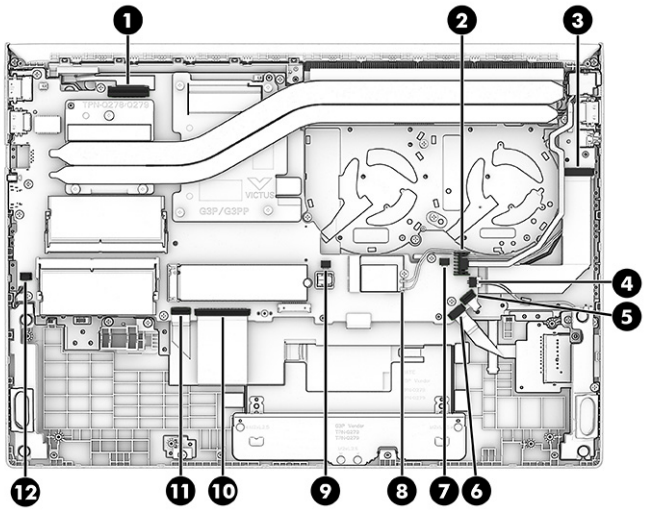

2. Remove the nine Phillips M2.0 × 4.0 screws that secure the system board to the computer.

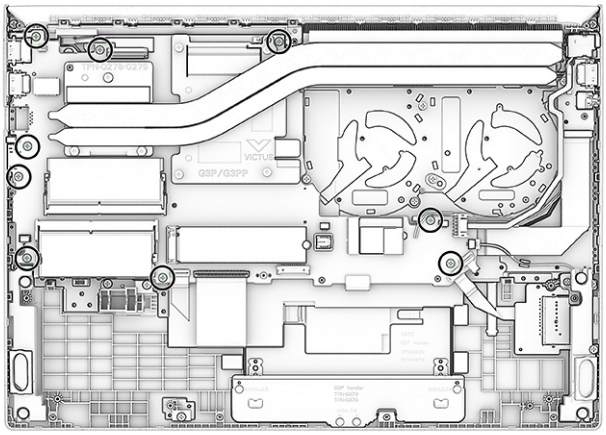

3. Lift the right edge of the system board, and then pull the board up and to the right to remove it from the computer **(2)**.

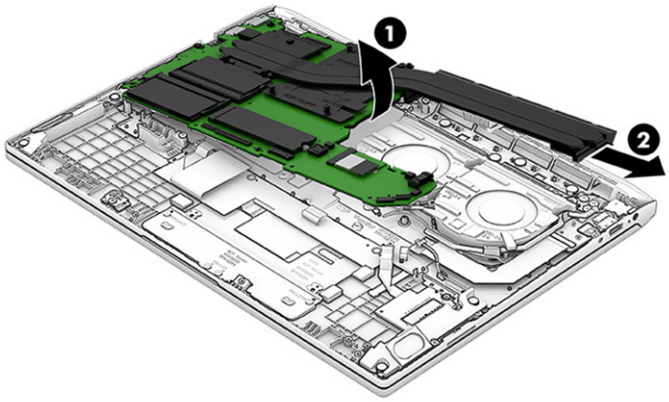

To install the system board, reverse this procedure.

Touchpad

To remove the touchpad, use this procedure and illustration.

Table 6-11 **Touchpad description and part number**

Description	Spare part number
Touchpad, ceramic white	N13309-001
Touchpad, mica silver	N13310-001
Touchpad, performance blue	N13311-001
Touchpad cable	N13312-001

Before removing the touchpad, follow these steps:

1. Prepare the computer for disassembly (see Preparation for disassembly on page 36).
2. Remove the bottom cover (see Bottom cover on page 36).
3. Remove the battery (see Battery on page 38).
4. Remove the fan assembly (see Fan assembly on page 45).
5. Remove the system board with heat sink installed (see System board on page 50).

Remove the touchpad:

1. Remove the four Phillips M2.0 × 2.0 screws **(1)** that secure the touchpad bracket, and then remove the bracket **(2)**.

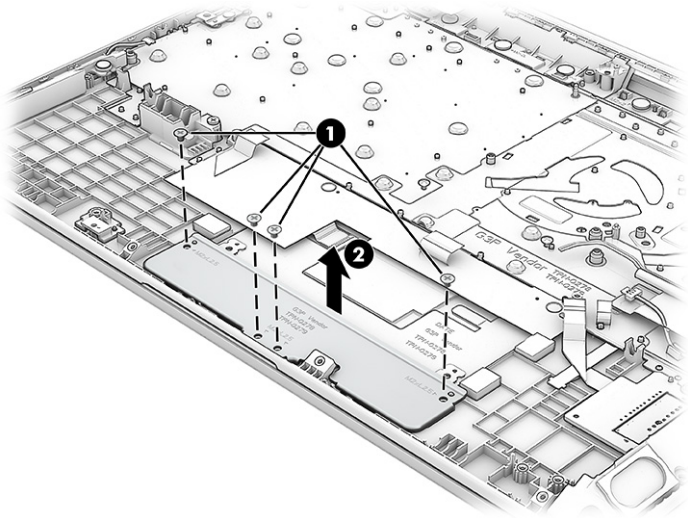

2. Remove the protective tape from the connector on the touchpad **(1)**.
3. Disconnect the cable **(2)** from the touchpad ZIF connector.
4. Lift the keyboard cable that covers the touchpad screws **(3)**.
5. Remove the Mylar that covers the screws **(4)**.
6. Remove the grounding tape from the right screw **(5)**.

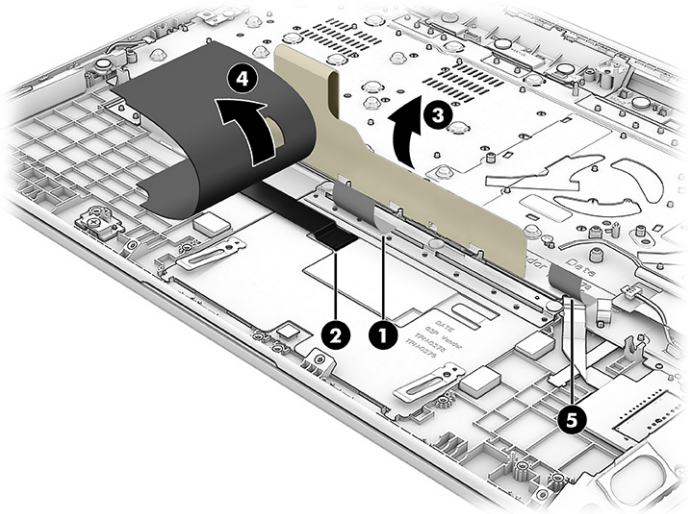

7. Remove the three Phillips M2.0 × 2.5 screws **(1)** that secure the touchpad to the computer.

8. Remove the touchpad **(2)**.

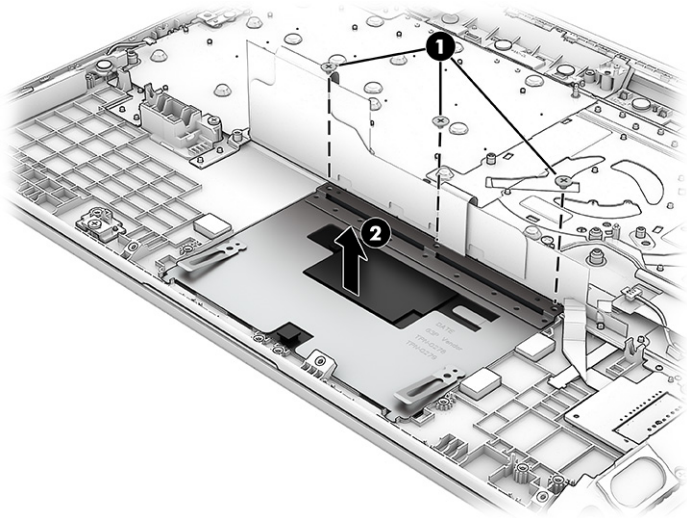

To install the touchpad, reverse this procedure.

Plastic rear vent and fin

To remove the plastic rear vent and fin, use this procedure and illustration.

Table 6-12 **Plastic rear vent and fin descriptions and part numbers**

Description	Spare part number
Dummy fin	N13308-001
Plastic rear vent	N13307-001

Before removing the plastic rear vent and fin, follow these steps:

1. Prepare the computer for disassembly (see Preparation for disassembly on page 36).
2. Remove the bottom cover (see Bottom cover on page 36).
3. Remove the battery (see Battery on page 38).
4. Remove the fan assembly (see Fan assembly on page 45).
5. Remove the system board with heat sink installed (see System board on page 50).

Remove the plastic rear vent and fin:

1. Remove the four Phillips 2.0 × 2.0 broadhead screws **(1)** that secure the fin to the computer, and then remove the fin **(2)**.

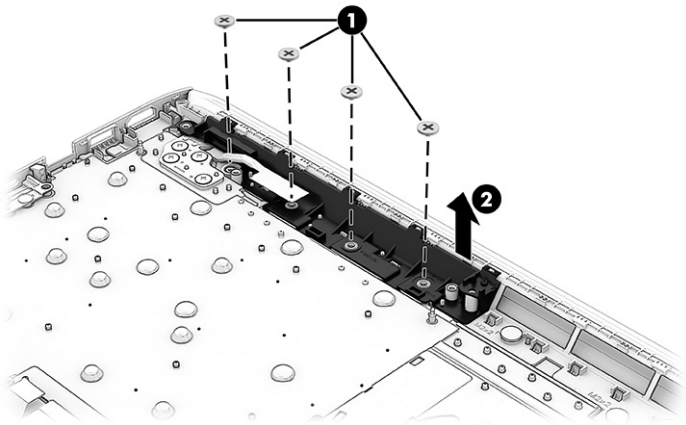

2. Remove the four Phillips M2.0 × 2.0 broadhead screws **(1)** and two Phillips M2.0 × 2.5 screws **(2)** that secure the plastic rear vent to the computer, and then remove the vent **(3)**.

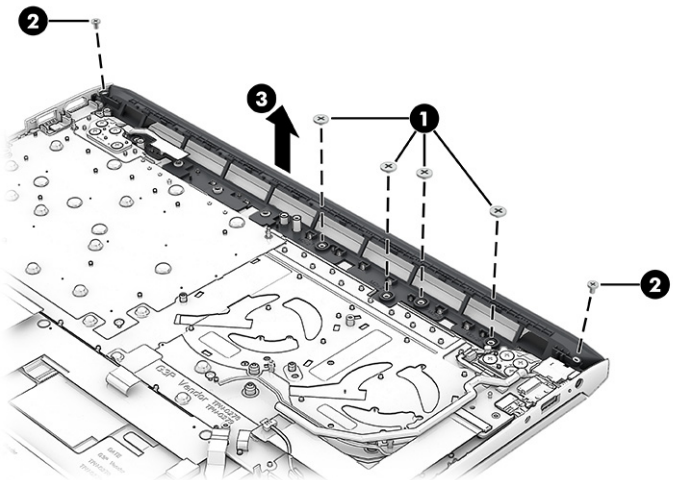

To install the plastic rear vent and fin, reverse this procedure.

Display assembly

To remove and disassemble the display assembly, use these procedures and illustrations.

NOTE: You can remove the bezel, display panel, and camera module without removing the entire display assembly from the computer. For more information, see Display subcomponents (without removing the display) on page 39. You do have to remove the display assembly to remove the remaining subcomponents.

Full hinge-up displays are not available as spare parts. Spare parts for displays are available only at the subcomponent level.

Before removing the display assembly, follow these steps:

1. Prepare the computer for disassembly (see Preparation for disassembly on page 36).
2. Remove the bottom cover (see Bottom cover on page 36).
3. Remove the battery (see Battery on page 38).
4. Remove the fan assembly (see Fan assembly on page 45).
5. Remove the I/O board bracket (see I/O board on page 47).
6. Remove the system board with heat sink installed (see System board on page 50).
7. Remove the plastic rear vent and fin (see Plastic rear vent and fin on page 55).

Remove the display assembly:

1. Open the display to open the hinges **(1)**.
2. Remove the eight Phillips M2.6 × 4.5 screws **(2)** that secure the display assembly to the computer.
3. Separate the display from the computer **(3)**.

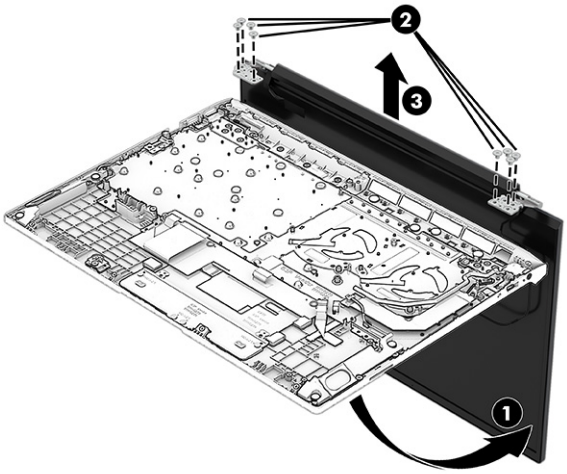

4. If you need to remove the bezel:
   a. Flex the top **(1)**, the left and right sides **(2)**, and then the bottom of the bezel **(3)** to release it.
   b. Remove the bezel from the display **(4)**.

   The display bezel is available as spare part number N13327-001.

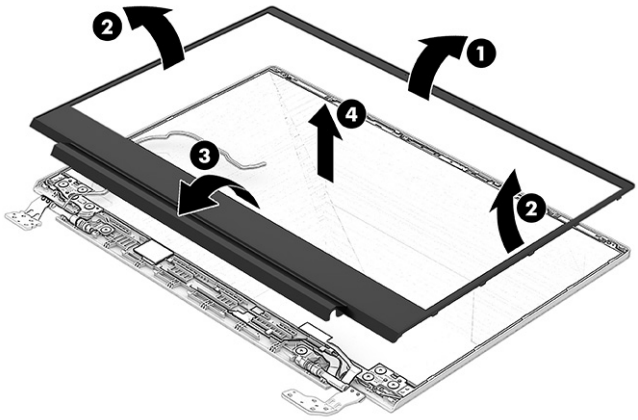

5. If you need to remove the display panel:

   a. At the top of the panel, use tweezers to grasp the end of the retention tape that is installed under the panel in three locations.

   b. While turning the tweezers **(1)**, wrap the tape around the tweezers as you continue to pull the tape **(2)** out from behind the display panel.

   c. Rotate the panel up and set it next to the display back cover **(3)**.

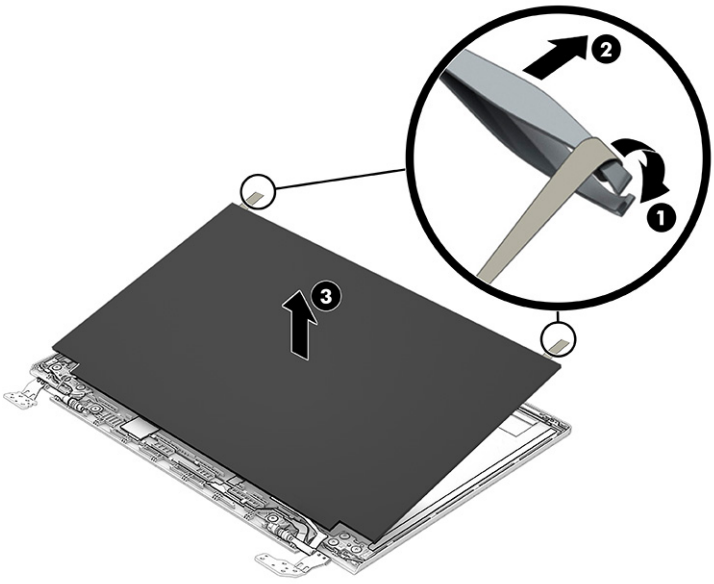

d. To disconnect the cable from the display panel, lift the tape from the connector on the panel **(1)**, and then disconnect the cable **(2)**.

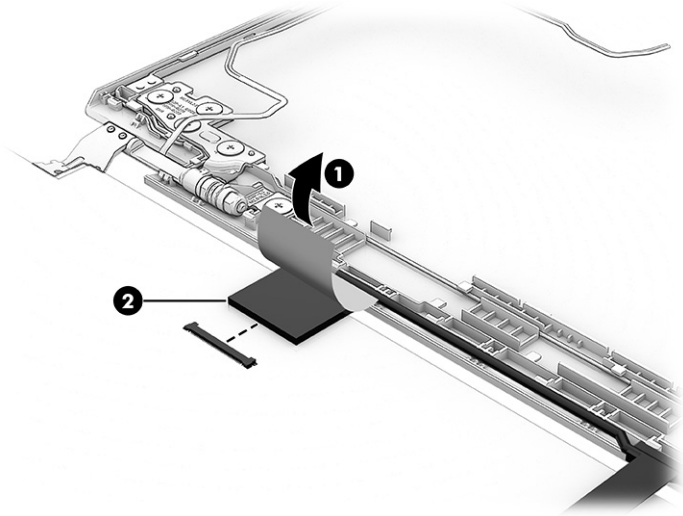

e. When installing the display panel, install the adhesive strips on each side of the display back cover as shown in the following illustration.

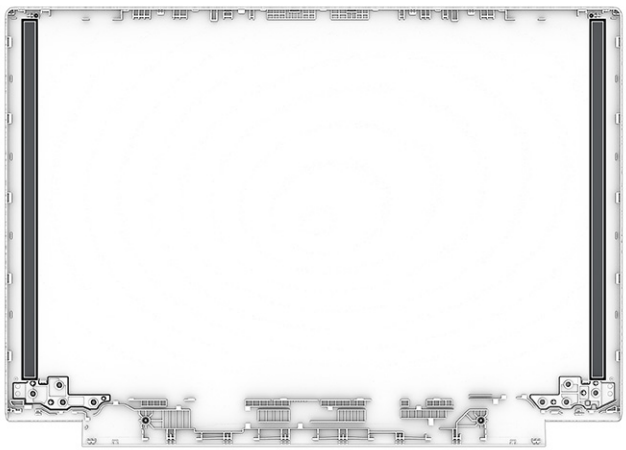

Display panels are available as the following spare part numbers:

N13293-001: FHD, SVA, 250 nits

N13294-001: FHD, UWVA, 250 nits

N13295-001: FHD, UWVA, 250 nits, 144 Hz

N13296-001: FHD, UWVA, 300 nits

The panel adhesive kit is available as spare part number N13334-001.

6. To remove the camera module:

a. Remove the two Phillips 1.6 × 2.5 screws **(1)** that secure the top bracket, lift up the hinge brackets slightly **(2)**, and then pull the top bracket out from under the hinge brackets to remove it **(3)**. The top bracket is available as spare part number N13330-001.

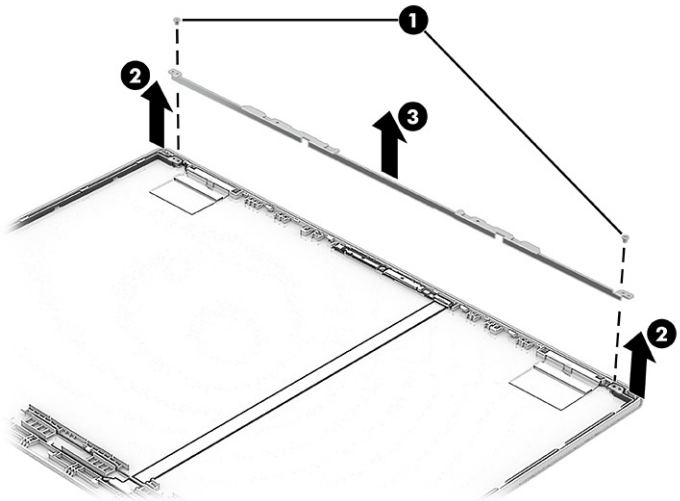

b. Use a tool to lift up evenly across the module and peel the module up from the display back cover **(1)**, and then disconnect the cable from the reverse ZIF connector on the module **(2)**. The camera module is available as spare part number N13328-001.

NOTE: For installation, note that the cable routes under the camera module before it connects to the module.

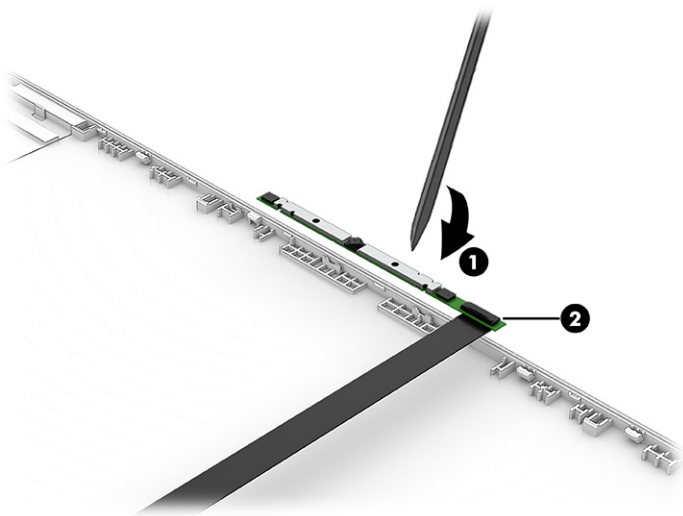

7. If you need to remove the hinges from the display back cover:

   a. Remove the five broadhead Phillips M2.0 × 2.0 screws **(1)** from each hinge.

   b. Remove the display hinges **(2)**.

   The display hinges are available using spare part number N13329-001.

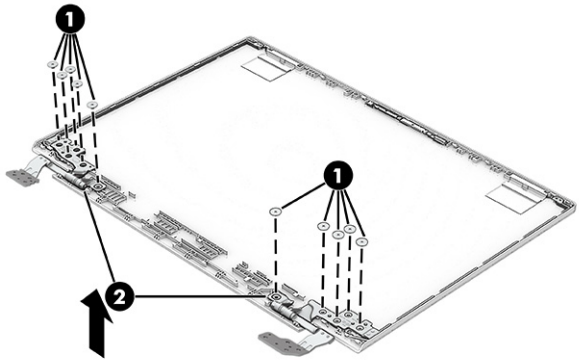

8. If you need to remove the display cable:
   - Peel the cable off the inside of the display rear cover **(1)**.

     The display cable is available as the following spare part numbers:

     N13331-001: 144 Hz models

     N13332-001: Standard models

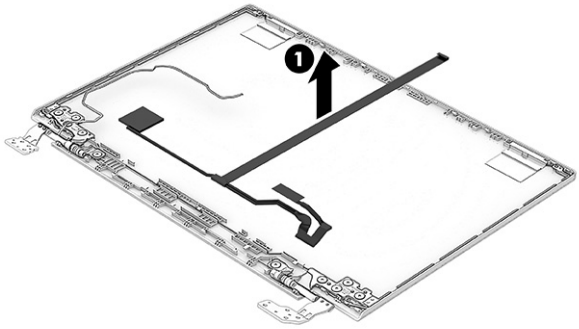

9. If you need to remove the WLAN antennas:
   a. Release the wireless antenna cables from the retention clips **(1)** on the display back cover.
   b. Peel the wireless antennas off the display rear cover **(2)**. (The antennas are attached with double-sided adhesive.) The wireless antennas are available using spare part number N13325-001 for models with a 300 nit panel and N13326-001 for models with a 250 nit panel.

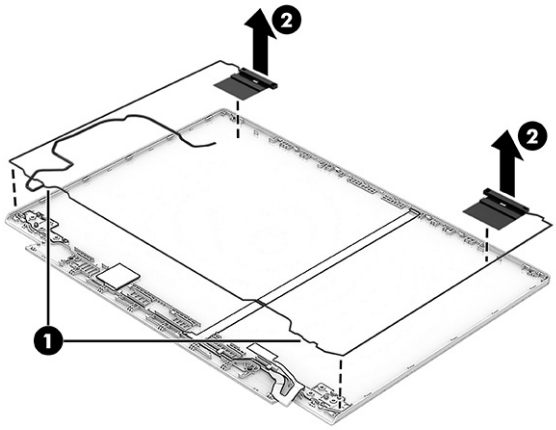

Display rear covers are available as the following spare part numbers:

N13319-001: 300 nit panel, ceramic white

N13320-001: 300 nit panel, mica silver

N13321-001: 300 nit panel, performance blue

N13322-001: 250 nit panel, ceramic white

N13323-001: 250 nit panel, mica silver

N13324-001: 250 nit panel, performance blue

To reassemble and replace the display assembly, reverse these procedures.

Top cover with keyboard

The top cover with keyboard remains after removing all other spare parts from the computer. In this section, the first table provides the main spare part number for the top cover with keyboard. The second table provides the country codes.

Table 6-13 Top cover with keyboard descriptions and part numbers

Description	Spare part number
Top cover with keyboard, ceramic white	N13297-*xx*1
Top cover with keyboard, mica silver	N13298-*xx*1
Top cover with keyboard, performance blue	N13299-*xx*1

Table 6-14 Spare part country codes

For use in country or region	Spare part number	For use in country or region	Spare part number	For use in country or region	Spare part number
Belgium	-A41	Hungary	-211	Saudi Arabia	-171
Brazil	-201	Iceland	-DD1	Slovenia	-BA1
Bulgaria	-261	India	-D61	South Korea	-AD1
Chile	-161	Israel	-BB1	Spain	-071

Table 6-14 Spare part country codes (continued)

For use in country or region	Spare part number	For use in country or region	Spare part number	For use in country or region	Spare part number
Czech Republic/Slovakia	-FL1	Italy	-061	Switzerland	-BG1
Denmark	-081	Japan	-291	Taiwan	-AB1
Denmark, Finland, and Norway	-DH1	The Netherlands	-B31	Thailand	-281
French Canada	-DB1	Northern Africa	-FP1	Turkey	-141
Finland/Sweden	-B71	Norway	-091	Turkey-F	-541
France	-051	Portugal	-131	Ukraine	-BD1
Germany	-041	Romania	-271	United Kingdom	-031
Greece	-151	Russia	-251	United States	-001

7 Using Setup Utility (BIOS)

Setup Utility, or Basic Input/Output System (BIOS), controls communication between all the input and output devices on the system (such as disk drives, display, keyboard, mouse, and printer). Setup Utility (BIOS) includes settings for the types of devices installed, the startup sequence of the computer, and the amount of system and extended memory.

NOTE: To start Setup Utility on convertible computers, your computer must be in notebook mode and you must use the keyboard attached to your notebook.

Starting Setup Utility (BIOS)

You have several ways to access the Setup Utility (BIOS).

IMPORTANT: Use extreme care when making changes in Setup Utility (BIOS). Errors can prevent the computer from operating properly.

- Turn on or restart the computer and quickly press f10.

  – or –

  Turn on or restart the computer, quickly press esc, and then press f10 when the Start menu is displayed.

Updating Setup Utility (BIOS)

Updated versions of Setup Utility (BIOS) might be available on the HP website. Most BIOS updates on the HP website are packaged in compressed files called *SoftPaqs*. Some download packages contain a file named Readme.txt, which contains information regarding installing and troubleshooting the file.

Determining the BIOS version

To decide whether you need to update Setup Utility (BIOS), first determine the BIOS version on your computer.

To reveal the BIOS version information (also known as *ROM date* and *System BIOS*), use one of these options.

- HP Support Assistant
  1. Select the **Search** icon in the taskbar, type `support` in the search box, and then select the **HP Support Assistant** app.

     – or –

     Select the question mark icon in the taskbar.
  2. Under **My notebook**, select **Specifications**.
- Setup Utility (BIOS)
  1. Start Setup Utility (BIOS) (see Starting Setup Utility (BIOS) on page 64).
  2. Select **Main**, and then make note of the BIOS version.

3. Select **Exit**, select one of the options, and then follow the on-screen instructions.

- In Windows, press ctrl+alt+s.

To check for later BIOS versions, see Preparing for a BIOS update on page 65.

Preparing for a BIOS update

Be sure to follow all prerequisites before downloading and installing a BIOS update.

IMPORTANT: To reduce the risk of damage to the computer or an unsuccessful installation, download and install a BIOS update only when the computer is connected to reliable external power using the AC adapter. Do not download or install a BIOS update while the computer is running on battery power, docked in an optional docking device, or connected to an optional power source. During the download and installation, follow these instructions:

- Do not disconnect power from the computer by unplugging the power cord from the AC outlet.
- Do not shut down the computer or initiate Sleep.
- Do not insert, remove, connect, or disconnect any device, cable, or cord.

NOTE: If your computer is connected to a network, consult the network administrator before installing any software updates, especially system BIOS updates.

Downloading a BIOS update

After you review the prerequisites, you can check for and download BIOS updates.

1. Select the **Search** icon in the taskbar, type `support` in the search box, and then select the **HP Support Assistant** app.

   – or –

   Select the question mark icon in the taskbar.

2. Select **Updates**. The **Checking for Updates** window opens, and Windows checks for updates.
3. Follow the on-screen instructions.
4. At the download area, follow these steps:

   a. Identify the most recent BIOS update and compare it to the BIOS version currently installed on your computer. If the update is more recent than your BIOS version, make a note of the date, name, or other identifier. You might need this information to locate the update later, after it has been downloaded to your hard drive.

   b. Follow the on-screen instructions to download your selection to the hard drive.

      Make a note of the path to the location on your hard drive where the BIOS update is downloaded. You will need to access this path when you are ready to install the update.

Installing a BIOS update

BIOS installation procedures vary. Follow any instructions that appear on the screen after the download is complete. If no instructions appear, follow these steps.

1. Select the **Search** icon in the taskbar, type `file` in the search box, and then select **File Explorer**.
2. Select your hard drive designation. The hard drive designation is typically Local Disk (C:).

3. Using the hard drive path you recorded earlier, open the folder that contains the update.
4. Double-click the file that has an .exe extension (for example, *filename*.exe).

   The BIOS installation begins.
5. Complete the installation by following the on-screen instructions.

NOTE: After a message on the screen reports a successful installation, you can delete the downloaded file from your hard drive.

8 Backing up, restoring, and recovering

You can use Windows tools or HP software to back up your information, create a restore point, reset your computer, create recovery media, or restore your computer to its factory state. Performing these standard procedures can return your computer to a working state faster.

IMPORTANT: If you will be performing recovery procedures on a tablet, the tablet battery must be at least 70% charged before you start the recovery process.

IMPORTANT: For a tablet with a detachable keyboard, connect the tablet to the keyboard base before beginning any recovery process.

Backing up information and creating recovery media

These methods of creating recovery media and backups are available on select products only.

Using Windows tools for backing up

HP recommends that you back up your information immediately after initial setup. You can do this task either using Windows Backup locally with an external USB flash drive or using online tools.

IMPORTANT: Windows is the only option that allows you to back up your personal information. Schedule regular backups to avoid information loss.

NOTE: If computer storage is 32 GB or less, Microsoft® System Restore is disabled by default.

Using the HP Cloud Recovery Download Tool to create recovery media (select products only)

You can use the HP Cloud Recovery Download Tool to create HP Recovery media on a bootable USB flash drive.

For details:

- Go to http://www.hp.com, search for HP Cloud Recovery, and then select the result that matches the type of computer that you have.

NOTE: If you cannot create recovery media yourself, contact support to obtain recovery discs. Go to http://www.hp.com/support, select your country or region, and then follow the on-screen instructions.

IMPORTANT: HP recommends that you follow the Restoring and recovery methods on page 68 to restore your computer before you obtain and use the HP recovery discs. Using a recent backup can return your machine to a working state sooner than using the HP recovery discs. After the system is restored, reinstalling all the operating system software released since your initial purchase can be a lengthy process.

Restoring and recovering your system

You have several tools available to recover your system both within and outside of Windows if the desktop cannot load.

HP recommends that you attempt to restore your system using the Restoring and recovery methods on page 68.

Creating a system restore

System Restore is available in Windows. The System Restore software can automatically or manually create restore points, or snapshots, of the system files and settings on the computer at a particular point.

When you use System Restore, it returns your computer to its state at the time you made the restore point. Your personal files and documents should not be affected.

Restoring and recovery methods

After you run the first method, test to see whether the issue still exists before you proceed to the next method, which might now be unnecessary.

1. Run a Microsoft System Restore.
2. Run Reset this PC.

   NOTE: The options **Remove everything** and then **Fully clean the drive** can take several hours to complete and leave no information on your computer. It is the safest way to reset your computer before you recycle it.

3. Recover using HP Recovery media. For more information, see Recovering using HP Recovery media on page 68.

For more information about the first two methods, see the Get Help app:

- Select the **Start** button, select **All apps**, select the **Get Help** app, and then enter the task you want to perform.

NOTE: You must be connected to the internet to access the Get Help app.

Recovering using HP Recovery media

You can use HP Recovery media to recover the operating system and drivers that were installed at the factory. On select products, it can be created on a bootable USB flash drive using the HP Cloud Recovery Download Tool.

For details, see Using the HP Cloud Recovery Download Tool to create recovery media (select products only) on page 67.

NOTE: If you cannot create recovery media yourself, contact support to obtain recovery discs. Go to http://www.hp.com/support, select your country or region, and then follow the on-screen instructions.

To recover your system:

- Insert the HP Recovery media, and then restart the computer.

NOTE: HP recommends that you follow the Restoring and recovery methods on page 68 to restore your computer before you obtain and use the HP recovery discs. Using a recent backup can return your machine to a working state sooner than using the HP recovery discs. After the system is restored, reinstalling all the operating system software released since your initial purchase can be a lengthy process.

Changing the computer boot order

If your computer does not restart using the HP Recovery media, you can change the computer boot order, the order of devices listed in BIOS for startup information. You can select an optical drive or a USB flash drive, depending on the location of your HP Recovery media.

IMPORTANT: For a tablet with a detachable keyboard, connect the tablet to the keyboard base before beginning these steps.

To change the boot order:

1. Insert the HP Recovery media.
2. Access the system **Startup** menu.
   - For computers or tablets with keyboards attached, turn on or restart the computer or tablet, quickly press esc, and then press f9 for boot options.
   - For tablets without keyboards, turn on or restart the tablet, quickly press and hold the volume up button, and then select **f9**.

     – or –

     Turn on or restart the tablet, quickly press and hold the volume down button, and then select **f9**.
3. Select the optical drive or USB flash drive from which you want to boot, and then follow the on-screen instructions.

Using HP Sure Recover (select products only)

Select computer models are configured with HP Sure Recover, a PC operating system (OS) recovery solution built into the hardware and software. HP Sure Recover can fully restore the HP OS image without installed recovery software.

Using HP Sure Recover, an administrator or user can restore the system and install:

- Latest version of the operating system
- Platform-specific device drivers
- Software applications, in the case of a custom image

To access the latest documentation for HP Sure Recover, go to http://www.hp.com/support. Follow the on-screen instructions to find your product and locate your documentation.

9 Using HP PC Hardware Diagnostics

You can use the HP PC Hardware Diagnostics utility to determine whether your computer hardware is running properly. The three versions are HP PC Hardware Diagnostics Windows, HP PC Hardware Diagnostics UEFI (Unified Extensible Firmware Interface), and (for select products only) Remote HP PC Hardware Diagnostics UEFI, a firmware feature.

Using HP PC Hardware Diagnostics Windows (select products only)

HP PC Hardware Diagnostics Windows is a Windows-based utility that allows you to run diagnostic tests to determine whether the computer hardware is functioning properly. The tool runs within the Windows operating system to diagnose hardware failures.

If HP PC Hardware Diagnostics Windows is not installed on your computer, first you must download and install it. To download HP PC Hardware Diagnostics Windows, see Downloading HP PC Hardware Diagnostics Windows on page 71.

Using an HP PC Hardware Diagnostics Windows hardware failure ID code

When HP PC Hardware Diagnostics Windows detects a failure that requires hardware replacement, a 24-digit failure ID code is generated for select component tests. For interactive tests, such as keyboard, mouse, or audio and video palette, you must perform troubleshooting steps before you can receive a failure ID.

- You have several options after you receive a failure ID:
  - Select **Next** to open the Event Automation Service (EAS) page, where you can log the case.

    – or –
  - Scan the QR code with your mobile device, which takes you to the EAS page, where you can log the case.

    – or –
  - Select the box next to the 24-digit failure ID to copy your failure code and send it to support.

Accessing HP PC Hardware Diagnostics Windows

After HP PC Hardware Diagnostics Windows is installed, you can access it from HP Support Assistant or the Start menu.

Accessing HP PC Hardware Diagnostics Windows from HP Support Assistant

After HP PC Hardware Diagnostics Windows is installed, follow these steps to access it from HP Support Assistant.

1. Select the **Search** icon in the taskbar, type `support` in the search box, and then select the **HP Support Assistant** app.

   – or –

   Select the question mark icon in the taskbar.

2. Select **Fixes & Diagnostics**.
3. Select **Run hardware diagnostics**, and then select **Launch**.
4. When the tool opens, select the type of diagnostic test that you want to run, and then follow the on-screen instructions.

NOTE: To stop a diagnostic test, select **Cancel**.

Accessing HP PC Hardware Diagnostics Windows from the Start menu (select products only)

After HP PC Hardware Diagnostics Windows is installed, follow these steps to access it from the Start menu.

1. Select the **Start** button, and then select **All apps**.
2. Select **HP PC Hardware Diagnostics Windows**.
3. When the tool opens, select the type of diagnostic test that you want to run, and then follow the on-screen instructions.

NOTE: To stop a diagnostic test, select **Cancel**.

Downloading HP PC Hardware Diagnostics Windows

The HP PC Hardware Diagnostics Windows downloading instructions are provided in English only. You must use a Windows computer to download this tool because only .exe files are provided.

Downloading the latest HP PC Hardware Diagnostics Windows version from HP

To download HP PC Hardware Diagnostics Windows from HP, follow these steps.

1. Go to http://www.hp.com/go/techcenter/pcdiags. The HP PC Diagnostics home page is displayed.
2. Select **Download HP Diagnostics Windows**, and then select the specific Windows diagnostics version to download to your computer or a USB flash drive.

The tool downloads to the selected location.

Downloading the HP PC Hardware Diagnostics Windows from the Microsoft Store

You can download the HP PC Hardware Diagnostics Windows from the Microsoft Store.

1. Select the Microsoft Store app on your desktop or select the **Search** icon in the taskbar, and then type `Microsoft Store` in the search box.
2. Type `HP PC Hardware Diagnostics Windows` in the **Microsoft Store** search box.
3. Follow the on-screen directions.

The tool downloads to the selected location.

Downloading HP Hardware Diagnostics Windows by product name or number (select products only)

You can download HP PC Hardware Diagnostics Windows by product name or number.

NOTE: For some products, you might have to download the software to a USB flash drive by using the product name or number.

1. Go to http://www.hp.com/support.
2. Select **Software and Drivers**, select your type of product, and then enter the product name or number in the search box that is displayed.
3. In the **Diagnostics** section, select **Download**, and then follow the on-screen instructions to select the specific Windows diagnostics version to be downloaded to your computer or USB flash drive.

The tool downloads to the selected location.

Installing HP PC Hardware Diagnostics Windows

To install HP PC Hardware Diagnostics Windows, navigate to the folder on your computer or the USB flash drive where the .exe file downloaded, double-click the .exe file, and then follow the on-screen instructions.

Using HP PC Hardware Diagnostics UEFI

HP PC Hardware Diagnostics UEFI (Unified Extensible Firmware Interface) allows you to run diagnostic tests to determine whether the computer hardware is functioning properly. The tool runs outside the operating system so that it can isolate hardware failures from issues that are caused by the operating system or other software components.

NOTE: For some products, you must use a Windows computer and a USB flash drive to download and create the HP UEFI support environment because only .exe files are provided. For more information, see Downloading HP PC Hardware Diagnostics UEFI to a USB flash drive on page 73.

If your PC does not start in Windows, you can use HP PC Hardware Diagnostics UEFI to diagnose hardware issues.

Using an HP PC Hardware Diagnostics UEFI hardware failure ID code

When HP PC Hardware Diagnostics UEFI detects a failure that requires hardware replacement, a 24-digit failure ID code is generated.

For assistance in solving the problem:

- Select **Contact HP**, accept the HP privacy disclaimer, and then use a mobile device to scan the failure ID code that appears on the next screen. The HP Customer Support - Service Center page appears with your failure ID and product number automatically filled in. Follow the on-screen instructions.

  – or –

  Contact support, and provide the failure ID code.

NOTE: To start diagnostics on a convertible computer, your computer must be in notebook mode, and you must use the attached keyboard.

NOTE: If you need to stop a diagnostic test, press esc.

Starting HP PC Hardware Diagnostics UEFI

To start HP PC Hardware Diagnostics UEFI, follow this procedure.

1. Turn on or restart the computer, and quickly press esc.

2. Press f2.

   The BIOS searches three places for the diagnostic tools, in the following order:

   a. Connected USB flash drive

   NOTE: To download the HP PC Hardware Diagnostics UEFI tool to a USB flash drive, see Downloading the latest HP PC Hardware Diagnostics UEFI version on page 73.

   b. Hard drive

   c. BIOS

3. When the diagnostic tool opens, select the type of diagnostic test that you want to run, and then follow the on-screen instructions.

Downloading HP PC Hardware Diagnostics UEFI to a USB flash drive

Downloading HP PC Hardware Diagnostics UEFI to a USB flash drive can be useful in some situations.

- HP PC Hardware Diagnostics UEFI is not included in the preinstallation image.
- HP PC Hardware Diagnostics UEFI is not included in the HP Tool partition.
- The hard drive is damaged.

NOTE: The HP PC Hardware Diagnostics UEFI downloading instructions are provided in English only, and you must use a Windows computer to download and create the HP UEFI support environment because only .exe files are provided.

Downloading the latest HP PC Hardware Diagnostics UEFI version

To download the latest HP PC Hardware Diagnostics UEFI version to a USB flash drive, follow this procedure.

1. Go to http://www.hp.com/go/techcenter/pcdiags. The HP PC Diagnostics home page is displayed.
2. Select **Download HP Diagnostics UEFI**, and then select **Run**.

Downloading HP PC Hardware Diagnostics UEFI by product name or number (select products only)

You can download HP PC Hardware Diagnostics UEFI by product name or number (select products only) to a USB flash drive.

NOTE: For some products, you might have to download the software to a USB flash drive by using the product name or number.

1. Go to http://www.hp.com/support.
2. Enter the product name or number, select your computer, and then select your operating system.
3. In the **Diagnostics** section, follow the on-screen instructions to select and download the specific UEFI Diagnostics version for your computer.

Using Remote HP PC Hardware Diagnostics UEFI settings (select products only)

Remote HP PC Hardware Diagnostics UEFI is a firmware (BIOS) feature that downloads HP PC Hardware Diagnostics UEFI to your computer. It can then execute the diagnostics on your computer, and it might upload results to a preconfigured server.

For more information about Remote HP PC Hardware Diagnostics UEFI, go to http://www.hp.com/go/techcenter/pcdiags, and then select **Find out more**.

Downloading Remote HP PC Hardware Diagnostics UEFI

HP Remote PC Hardware Diagnostics UEFI is also available as a SoftPaq that you can download to a server.

Downloading the latest Remote HP PC Hardware Diagnostics UEFI version

You can download the latest HP PC Hardware Diagnostics UEFI version to a USB flash drive.

1. Go to http://www.hp.com/go/techcenter/pcdiags. The HP PC Diagnostics home page is displayed.
2. Select **Download Remote Diagnostics**, and then select **Run**.

Downloading Remote HP PC Hardware Diagnostics UEFI by product name or number

You can download HP Remote PC Hardware Diagnostics UEFI by product name or number.

NOTE: For some products, you might have to download the software by using the product name or number.

1. Go to http://www.hp.com/support.
2. Select **Software and Drivers**, select your type of product, enter the product name or number in the search box that is displayed, select your computer, and then select your operating system.
3. In the **Diagnostics** section, follow the on-screen instructions to select and download the **Remote UEFI** version for the product.

Customizing Remote HP PC Hardware Diagnostics UEFI settings

Using the Remote HP PC Hardware Diagnostics setting in Computer Setup (BIOS), you can perform several customizations.

- Set a schedule for running diagnostics unattended. You can also start diagnostics immediately in interactive mode by selecting **Execute Remote HP PC Hardware Diagnostics**.
- Set the location for downloading the diagnostic tools. This feature provides access to the tools from the HP website or from a server that has been preconfigured for use. Your computer does not require the traditional local storage (such as a hard drive or USB flash drive) to run remote diagnostics.
- Set a location for storing the test results. You can also set the user name and password that you use for uploads.
- Display status information about the diagnostics run previously.

To customize Remote HP PC Hardware Diagnostics UEFI settings, follow these steps:

1. Turn on or restart the computer, and when the HP logo appears, press f10 to enter Computer Setup.

2. Select **Advanced**, and then select **Settings**.
3. Make your customization selections.
4. Select **Exit**, then select **Save Changes and Exit** to save your settings.

Your changes take effect when the computer restarts.

10 Specifications

This chapter provides specifications for your computer.

Computer specifications

This section provides specifications for your computer. When you travel with your computer, the computer dimensions and weights, as well as input power ratings and operating specifications, provide helpful information.

Table 10-1 **Computer specifications**

	Metric	U.S.
Dimensions		
Width	**357.9 mm**	14.1 in
Depth	**255.0 mm**	10.0 in
Height	**23.5 mm**	0.93 in
Weight	**2296 g**	5.06 lb
Input power		
Operating voltage and current	19.5 V dc @ 7.70 A – 150 W 19.5 V dc @ 10.3 A – 200 W	
Temperature		
Operating	**5°C to 35°C**	41°F to 95°F
Nonoperating	**–20°C to 60°C**	–4°F to 140°F
Relative humidity (noncondensing)		
Operating	10% to 90%	
Nonoperating	5% to 95%	
Maximum altitude (unpressurized)		
Operating	**–15 m to 3,048 m**	–50 ft to 10,000 ft
Nonoperating	**–15 m to 12,192 m**	–50 ft to 40,000 ft

NOTE: Applicable product safety standards specify thermal limits for plastic surfaces. The device operates well within this range of temperatures.

Display specifications

This section provides specifications for your display.

Table 10-2 **Display specifications**

	Metric	U.S.
Active diagonal size	**39.6 cm**	15.6 in
Resolution	1920 × 1080 (FHD)	
Surface treatment	Antiglare	
Brightness	250 nits (45% NTSC) 300 nits (100% sRGB)	
Viewing angle	UWVA SVA	
Backlight	WLED	
Display panel interface	eDP	

Solid-state drive specifications

This section provides specifications for your solid-state drives.

Table 10-3 **Solid-state drive specifications**

	256 GB*	512 GB*	1 TB*
Dimensions			
Height	1.0 mm	1.0 mm	1.0 mm
Length	50.8 mm	50.8 mm	50.8 mm
Width	28.9 mm	28.9 mm	28.9 mm
Weight	< 10 g	< 10 g	< 10 g
Interface type	PCIe	PCIe	PCIe
Ready time, maximum (to not busy)	1.0 ms	< 1.0 ms	1.0 ms
Access times, logical	0.1 ms	0.1 ms	0.1 ms
Transfer rate			
Sequential read	up to 2150 MBps	up to 2150 MBps	up to 2150 MBps
Random read	Up to 300,000 IOPs	Up to 300,000 IOPs	Up to 300,000 IOPs
Sequential write	up to 1550 MBps	up to 1550 MBps	up to 1550 MBps
Random write	Up to 100,000 IOPs	Up to 100,000 IOPs	Up to 100,000 IOPs
Total logical sectors	468,883,296	1,000,215,216	1,500,336,388
Operating temperature	**0°C to 70°C** (32°F to 158°F)		

*1 GB = 1 billion bytes when referring to hard drive storage capacity. Actual accessible capacity is less. Actual drive specifications may differ slightly.

NOTE: Certain restrictions and exclusions apply. Contact support for details.

11 Power cord set requirements

This chapter provides power cord requirements for countries and regions.

The wide-range input feature of the computer permits it to operate from any line voltage from 100 V ac to 120 V ac, or from 220 V ac to 240 V ac.

The three-conductor power cord set included with the computer meets the requirements for use in the country or region where the equipment is purchased.

Power cord sets for use in other countries or regions must meet the requirements of the country and region where the computer is used.

Requirements for all countries

These power cord requirements are applicable to all countries and regions.

- The length of the power cord set must be at least **1.0 m** (3.3 ft) and no more than **2.0 m** (6.5 ft).
- All power cord sets must be approved by an acceptable accredited agency responsible for evaluation in the country or region where the power cord set will be used.
- The power cord sets must have a minimum current capacity of 10 A and a nominal voltage rating of 125 V ac or 250 V ac, as required by the power system of each country or region.
- The appliance coupler must meet the mechanical configuration of an EN 60 320/IEC 320 Standard Sheet C13 connector for mating with the appliance inlet on the back of the computer.

Requirements for specific countries and regions

To determine power cord requirements for specific countries and regions, use this table.

Table 11-1 **Power cord requirements for specific countries and regions**

Country/region	Accredited agency	Applicable note number
Argentina	IRAM	1
Australia	SAA	1
Austria	OVE	1
Belgium	CEBEC	1
Brazil	ABNT	1
Canada	CSA	2
Chile	IMQ	1
Denmark	DEMKO	1
Finland	FIMKO	1
France	UTE	1
Germany	VDE	1

Table 11-1 Power cord requirements for specific countries and regions (continued)

Country/region	Accredited agency	Applicable note number
India	BIS	1
Israel	SII	1
Italy	IMQ	1
Japan	JIS	3
Netherlands	KEMA	1
New Zealand	SANZ	1
Norway	NEMKO	1
People's Republic of China	CCC	4
Saudi Arabia	SASO	7
Singapore	PSB	1
South Africa	SABS	1
South Korea	KTL	5
Sweden	SEMKO	1
Switzerland	SEV	1
Taiwan	BSMI	6
Thailand	TISI	1
United Kingdom	ASTA	1
United States	UL	2

1. The flexible cord must be Type H05VV-F, three-conductor, 0.75 mm^2 conductor size. Power cord set fittings (appliance coupler and wall plug) must bear the certification mark of the agency responsible for evaluation in the country or region where it will be used.
2. The flexible cord must be Type SVT/SJT or equivalent, No. 18 AWG, three-conductor. The wall plug must be a two-pole grounding type with a NEMA 5-15P (15 A, 125 V ac) or NEMA 6-15P (15 A, 250 V ac) configuration. CSA or C-UL mark. UL file number must be on each element.
3. The appliance coupler, flexible cord, and wall plug must bear a T mark and registration number in accordance with the Japanese Dentori Law. The flexible cord must be Type VCTF, three-conductor, 0.75 mm^2 or 1.25 mm^2 conductor size. The wall plug must be a two-pole grounding type with a Japanese Industrial Standard C8303 (7 A, 125 V ac) configuration.
4. The flexible cord must be Type RVV, three-conductor, 0.75 mm^2 conductor size. Power cord set fittings (appliance coupler and wall plug) must bear the CCC certification mark.
5. The flexible cord must be Type H05VV-F three-conductor, 0.75 mm^2 conductor size. KTL logo and individual approval number must be on each element. Approval number and logo must be printed on a flag label.
6. The flexible cord must be Type HVCTF three-conductor, 1.25 mm^2 conductor size. Power cord set fittings (appliance coupler, cable, and wall plug) must bear the BSMI certification mark.
7. For 127 V ac, the flexible cord must be Type SVT or SJT 3-conductor, 18 AWG, with plug NEMA 5-15P (15 A, 125 V ac), with UL and CSA or C-UL marks. For 240 V ac, the flexible cord must be Type H05VV-F three-conductor, 0.75 mm^2 or 1.00 mm^2 conductor size, with plug BS 1363/A with BSI or ASTA marks.

12 Recycling

When a nonrechargeable or rechargeable battery has reached the end of its useful life, do not dispose of the battery in general household waste. Follow the local laws and regulations in your area for battery disposal.

HP encourages customers to recycle used electronic hardware, HP original print cartridges, and rechargeable batteries. For more information about recycling programs, see the HP website at http://www.hp.com/recycle.

Index

A

AC adapter and battery light, identifying 6
AC adapter, spare part number 21
action key, identifying 13
antenna
  illustrated 21
  spare part number 21
audio-out (headphone)/audio-in (microphone) combo jack, identifying 6
audio, product description 2

B

backup, creating 67
backups 67
battery
  illustrated 19
  spare part number 19
BIOS
  determining version 64
  downloading an update 65
  starting the Setup Utility 64
  updating 64
Bluetooth label 15
boot order, changing 69
bottom components 13
bottom cover
  illustrated 19
  removal 36
  spare part number 36
  spare part numbers 19
buttons
  left touchpad 9
  power 12, 13
  right touchpad 9

C

camera
  identifying 8
camera light, identifying 8
camera/microphone module
  illustrated 20
  spare part number 20
caps lock light 10
card reader
  illustrated 19
  removal 48
  spare part number 19, 48
caring for your computer 27
cautions
  electrostatic discharge 23, 24
cleaning your computer 27
  caring for wood veneer 29
  disinfecting 28
  HP Easy Clean 27
  removing dirt and debris 27
components
  bottom 13
  display 7
  keyboard area 8
  left side 6
  lights 10
  rear 14
  right side 5
  touchpad 9
computer major components 17
computer specifications 76
connectors
  power 6
control zone 9

D

display
  specifications 76
display assembly
  subcomponents 20
display back cover
  illustrated 21
  spare part numbers 21
display components 7
display panel
  illustrated 20
  product description 1
  spare part numbers 20
display panel cable
  illustrated 20
  spare part number 20
dummy fin
  illustrated 19
  spare part number 19

E

electrostatic discharge (ESD) 23, 24
  preventing damage 23-25
esc key, identifying 12

F

fan assembly
  removal 45
  spare part number 45
fin
  removal 55
  spare part numbers 55
fn key, identifying 12

G

graphics controller, product description 1
grounding methods 23-25
guidelines
  packaging 23, 29
  transporting 23, 29
  workstation 23

H

hard drive
  product description 2
  specifications 76
HDMI port
  identifying 5
heat sink
  removal 49
  spare part numbers 49
heat sink assembly
  illustrated 18
  spare part numbers 18
hinge
  illustrated 21
  spare part numbers 21
HP PC Hardware Diagnostics UEFI
  downloading 73
  failure ID code 72
  starting 72
  using 72
HP PC Hardware Diagnostics Windows
  accessing 70, 71

downloading 71
failure ID code 70
installing 72
using 70
HP Recovery media
recovery 68
HP Sure Recover 69

I

I/O board
illustrated 19
removal 47
spare part number 19, 47
illustrated parts catalog 17
integrated numeric keypad, identifying 13
internal microphones, identifying 8

J

jacks
audio-out (headphone)/audio-in (microphone) 6
network 5
RJ-45 (network) 5

K

keyboard
product description 3
keypad, integrated numeric 13
keys
action 13
esc 12
fn 12
num lock 13
Windows 13

L

labels
Bluetooth 15
regulatory 15
serial number 15
service 15
wireless certification 15
WLAN 15
left control zone, identifying 9, 10
left side components 6
lights
AC adapter and battery 6
camera 8
caps lock 10
mute 10
power 11
RJ-45 (network) status 5
touchpad 9, 10
long vent
illustrated 19
spare part number 19
low blue light mode 7

M

memory module
product description 2
memory modules
removal 33
spare part numbers 33
microphone
product description 2
model name 1
mute light, identifying 10

N

network jack, identifying 5
num lock key, identifying 13

O

operating system, product description 4

P

packaging guidelines 23, 29
pointing device, product description 3
ports
HDMI 5
product description 3
USB SuperSpeed 5 Gbps 5
USB SuperSpeed 5 Gbps port with HP Sleep and Charge 6
USB Type-C SuperSpeed port with HP Sleep and Charge and DisplayPort output 5
power button, identifying 12, 13
power connector
identifying 6
power connector cable
removal 46
spare part number 46
power cord
requirements for all countries 78
requirements for specific countries and regions 78
set requirements 78
spare part numbers 21, 22
power light, identifying 11
power requirements, product description 3
primary storage
product description 2
processor
product description 1
processor, product description 1
product description
audio 2
display panel 1
graphics controller 1
hard drive 2
keyboard 3
memory module 2
microphone 2
operating system 4
pointing device 3
ports 3
power requirements 3
primary storage 2
product name 1
security 4
serviceability 4
solid-state drive 2
video 2
wireless 2
product name 1
product name and number, computer 15

R

recovery 67
discs 68
media 68
USB flash drive 68
recovery media 67
creating using HP Cloud Recovery Download Tool 67
creating using Windows tools 67
regulatory information
regulatory label 15
wireless certification labels 15
Remote HP PC Hardware Diagnostics UEFI settings
customizing 74
using 74
removal and replacement
procedures 32, 36
solid-state drive 32
restoring 67
restoring and recovery methods 68
right control zone, identifying 9, 10

right side components 5
RJ-45 (network) jack, identifying 5
RJ-45 (network) status lights, identifying 5

S

security, product description 4
serial number, computer 15
service labels, locating 15
serviceability, product description 4
slots
  memory card reader 7
solid-state drive
  illustrated 19
  product description 2
  removal and replacement 32
  spare part numbers 19
  specifications 77
spare part country codes 62
speaker
  illustrated 18
  removal 44
  spare part number 18, 44
speakers 14
special keys
  identifying 12
  using 12
specifications
  computer 76
  display 76
  hard drive 76
  solid-state drive 77
static electricity 23, 24
support information 29
system board
  illustrated 18
  removal 50
  spare part numbers 18, 50
system restore 68
system restore point, creating 67

T

top cover
  spare part numbers 62
touchpad
  illustrated 18
  removal 53
  settings 9
  spare part numbers 18, 53
touchpad buttons
  identifying 9
touchpad components 9
touchpad light, identifying 9, 10
touchpad settings, adjusting 9
touchpad zone, identifying 9, 10
transporting guidelines 23, 29
traveling with the computer 15

U

USB SuperSpeed 5 Gbps port with HP Sleep and Charge, identifying 6
USB SuperSpeed 5 Gbps port, identifying 5
USB Type-C SuperSpeed port with HP Sleep and Charge and DisplayPort output, identifying 5

V

vent
  removal 55
  spare part numbers 55
vents, identifying 14
video, product description 2

W

Windows
  backup 67
  recovery media 67
  system restore point 67
Windows key, identifying 13
Windows tools, using 67
wireless antennas, identifying 8
wireless certification label 15
wireless, product description 2
WLAN antenna kit
  illustrated 21
  spare part number 21
WLAN antennas, identifying 8
WLAN device 15
WLAN label 15
WLAN module
  removal 42
  spare part numbers 42
workstation guidelines 23